SURFACE PROTECTION	
I	ZINC PLATED WITH CR6+ FREE
II	ELECTRO-PAINTING
III	SURFACE OXIDIZATION
IV	HARD POLYETHYLENE
V	STICKER

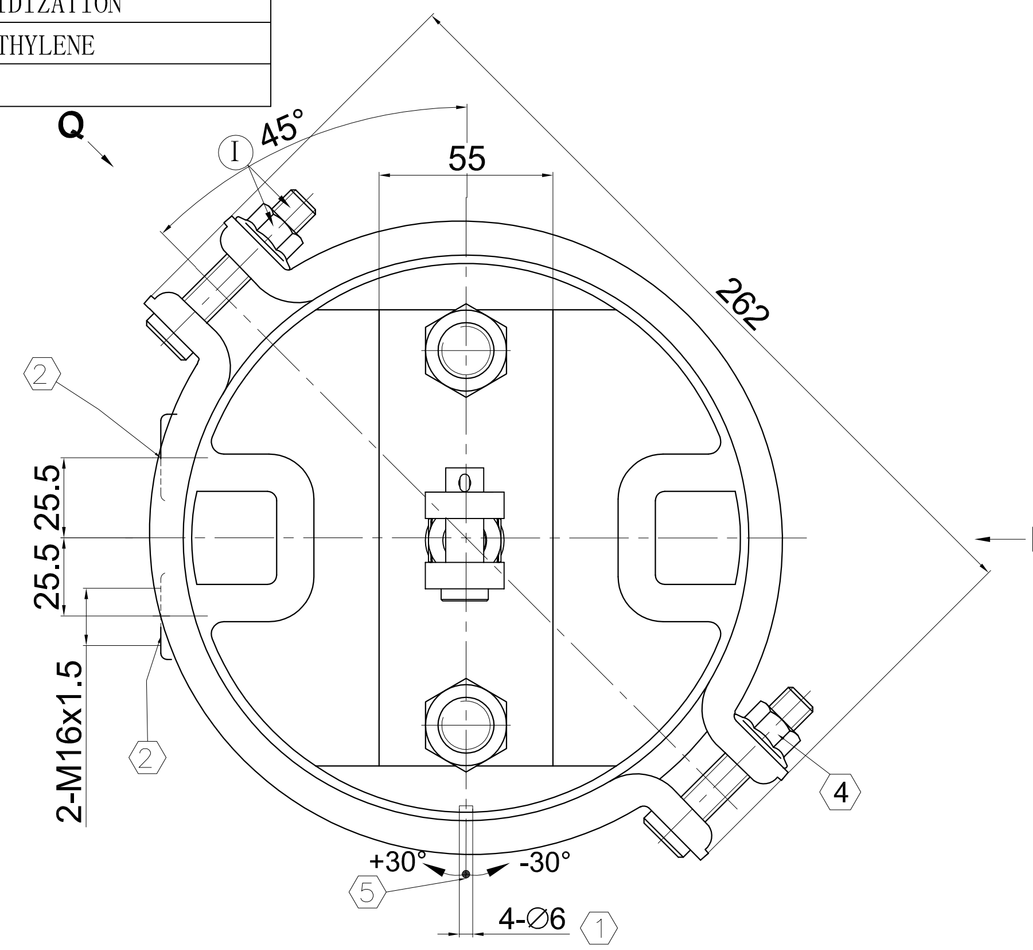

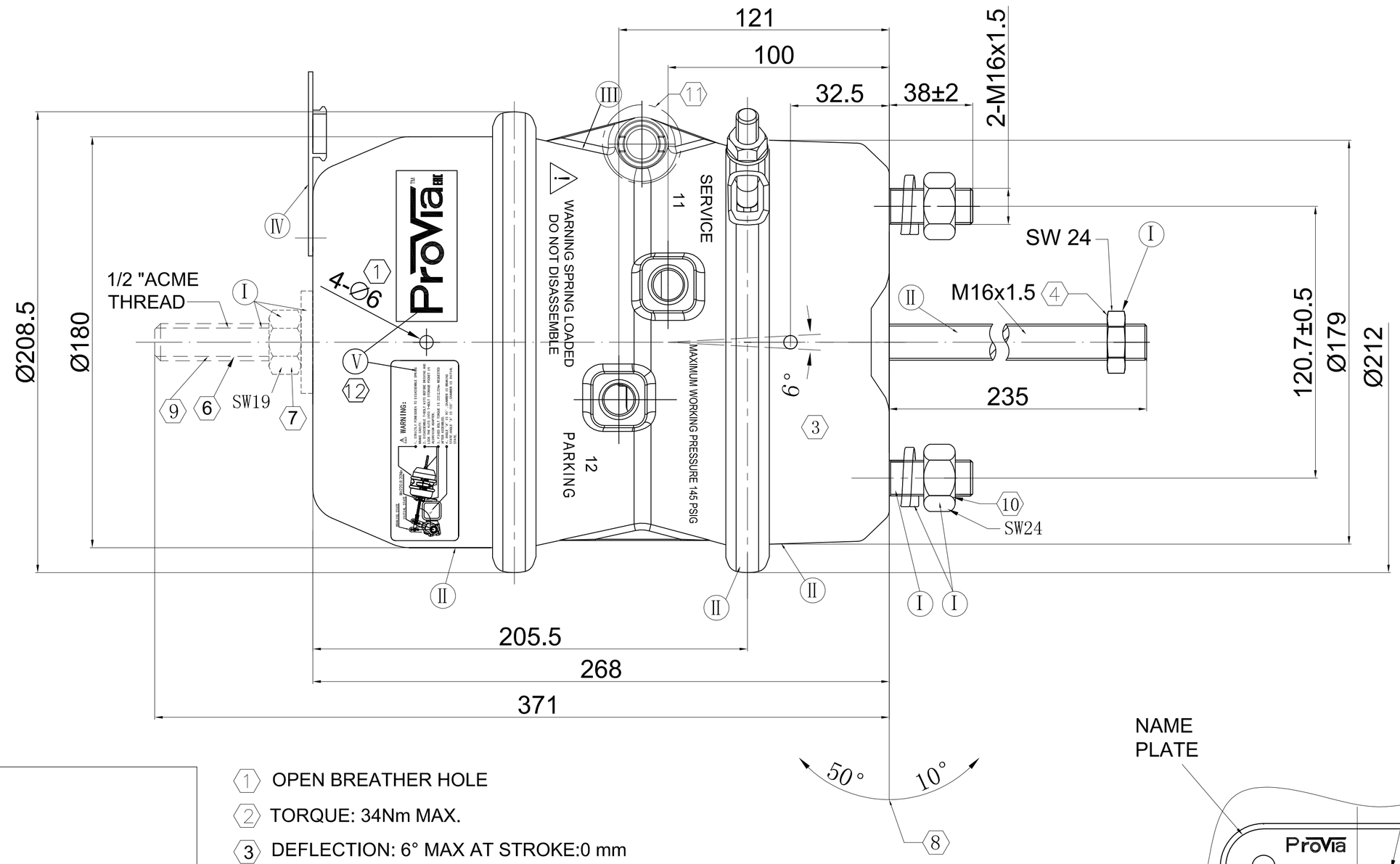

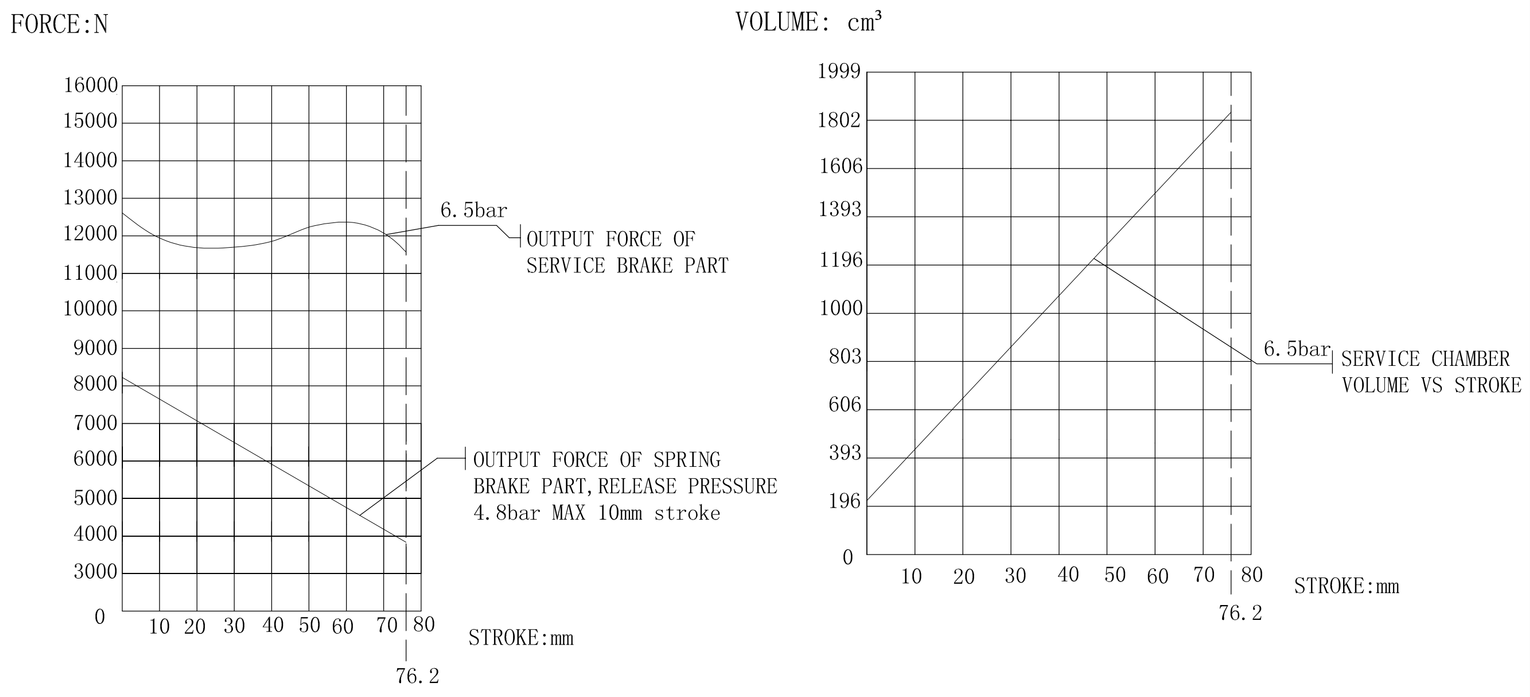

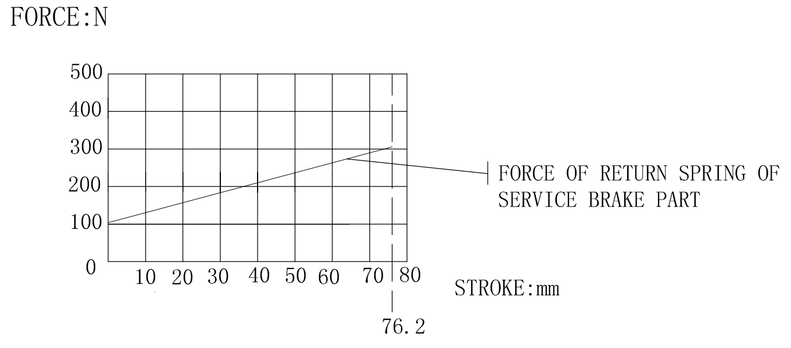

GRAPHS FOR INFORMATION ONLY

1. OPEN BREATHER HOLE
2. TORQUE: 34Nm MAX.
3. DEFLECTION: 6° MAX AT STROKE:0 mm
4. TORQUE: ⩾25Nm
5. TO BE INSTALLED WITH THE BREATHER HOLE OPEN AT BOTTOM MOST POSITION
6. CONDITION AS SUPPLIED : SPRING BRAKE APPLIED
7. TORQUE:MAX.25Nm
8. ADMISSIBLE INSTALLATION POSITION
9. RELEASED POSITION
10. TORQUE: 220±20 Nm
11. FIXTURE OF RELEASE BOLT TORQUE: 22.5±2.5 Nm
12. DIRECTION:AS SHOWN IN THE PICTURE
POSITION:IN THE MIDDLE OF THE TWO BREATHER HOLES, AND THE HORIZONTAL CENTER LINE OF STICKERS IS SAME AS THE BREATHER HOLE'S

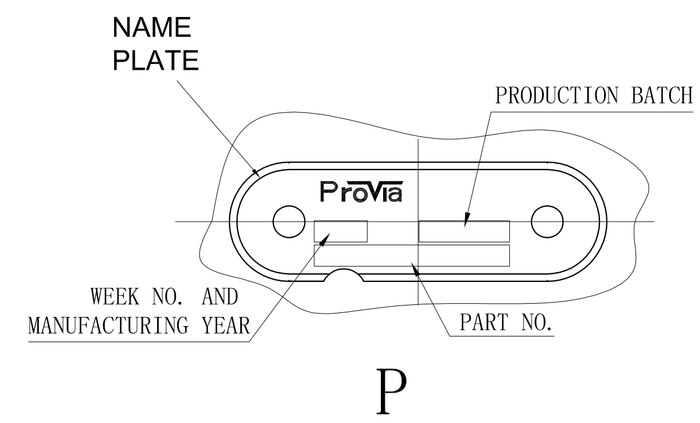

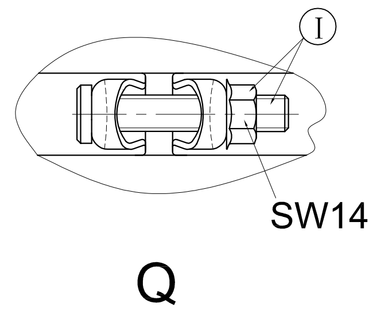

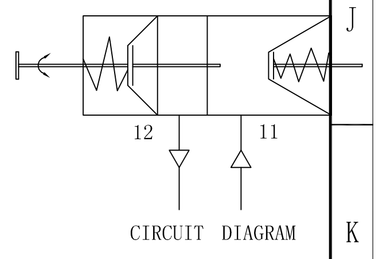

TECHNICAL REQUIREMENT:
1.STROKE-PARKING CHAMBER:≥76.2mm
SERVICE CHAMBER:≥76.2mm;
2.WORKING PRESSURE:APPLIED PRESSURE 8.5Bar;
MAX WORKING PRESSURE:10Bar
3.WORKING TEMPERATURE:-40℃...+80℃（-40℉...+176℉);
4.THE DRAWING IS AT CAGED CONDITION,THE PARKING CHAMBER WILL BE AT UNCAGED CONDITION DURING SHIPMENT

General Specification: JED-334-1 , Size ISO 14405 LP				Copyright WABCO	ProVia
Further Technical Data: PRO 000 008 0				Date / Signature	DOUBLE-DIAPHRAGM ACTUATOR CAM 30/30-3.0"
Doc. Code: 0335	Sheet: 1	To: 6		Drawn: 2018-04-27 Josephselvakumar	
General Tolerances JED-261				Checked: 2018-04-27 Aswinkumar	
Class 1)	Range of Nominal Dimensions (± mm)			Expert: Suresh Gopalakrund	
Fine	0.5	1.0	1.5	2.0	
Medium	X 1.0	2.0	3.0	4.0	±3°
Coarse	2.0	3.5	5.0	6.5	
Topped Holes acc.					
1) Tolerance Class Applied Crossmarked					

Mass	Scale	Material No.	Date of first issue: 2018-04-27		
9.5 kg	1:1	PRO 000 012 0	Doc. Code	Language	Sheet
Size	CAD System		005	EN	1/1
A 1	CREO		ECN-No. / Revision / Techn. Resp.	Replacement for	
			– / – / 5420_AM	–	

100mm

Nos présentes conserves la propriété et/ou le droit d'auteur sur ces documents, qu'elles soient ou non protégées par un dessin ou modèle, ainsi que le droit de disposer de la matière et de la substance. Toute utilisation et communication de ces documents non conformes à leur destination ne sont pas autorisées sans notre accord préalable. Copyright of this document and/or of any other IP is reserved and we are the owner of the contents thereof, whether registered or not. Any use or disclosure of the contents of this document not in accordance with its purpose is not permitted without our prior consent.

Wir behalten uns das Recht der Verfügung über Substanz und Stoffe vor, ob sie nun geschützt sind oder nicht, sowie das Recht der Verfügung über Stoffe und Substanz. Alle Rechte vorbehalten. Die Weitergabe dieses Dokuments an Dritte bedarf unserer Zustimmung.