<1> SAFETY CHARACTERISTICS	0
<2> SIGNIFICANT CHARACTERISTICS	0

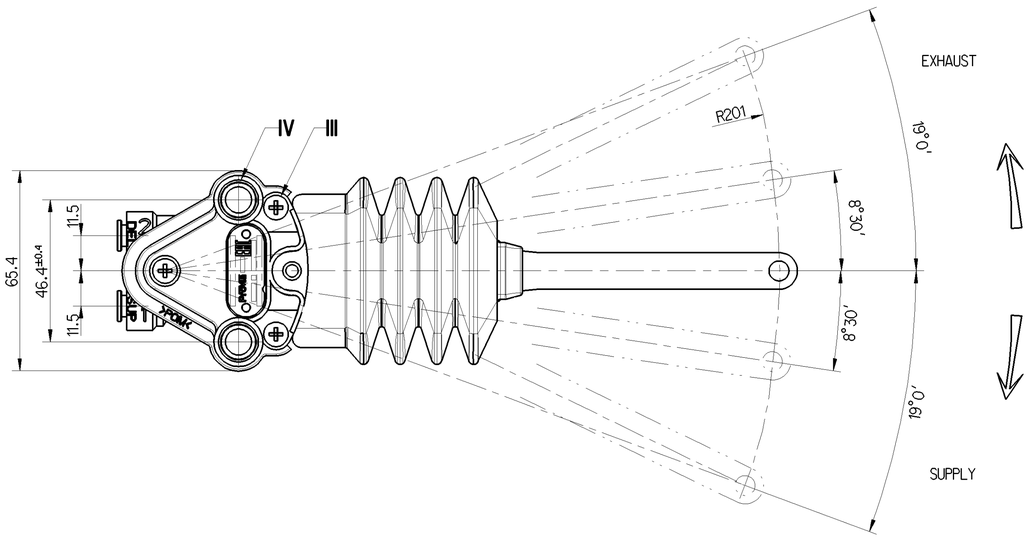

	MATERIAL	SURFACE PROTECTION
I	POM	
II	EPDM	
III	STEEL	Zn
IV	STEEL	Zn
V	PA 6.6 30GF	
VI	STEEL	Zn
VII	STEEL	Zn
VIII	POM	

FLOW RATE FOR : P1=8 bar and P1=11 bar

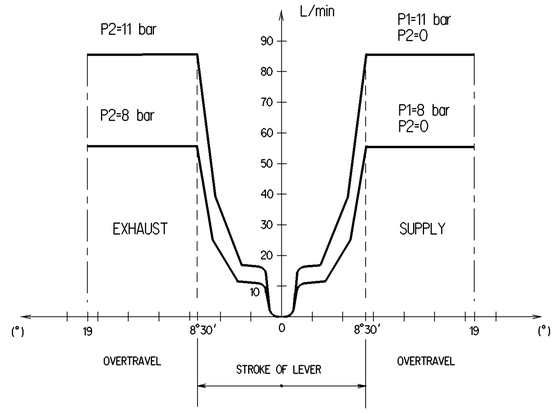

NAME PLATE DETAILS

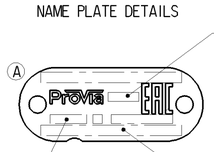

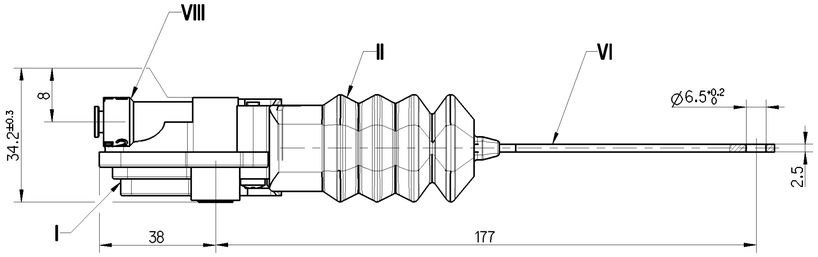

1 SUPPLY	
2 DELIVERY	
THERMAL RANGE	-40°C ... +80°C
WORKING PRESSURE	P1= 11 bar MAX.
EXCEPTIONAL INLET PRESSURE	P1= 14 bar MAX.
RESIDUAL PRESSURE	P2= 0.6±0.3 bar

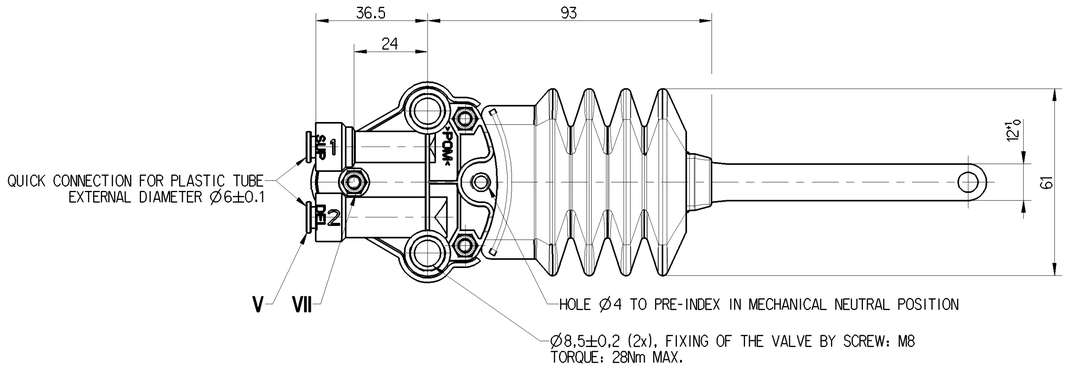

SYMBOL

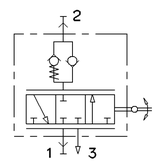

General Specification: JED-334-1 , Size ISO 14405 LP
Further Technical Data:Product Specification PR00070010
Doc. Code: 035 Sheet: 1 To 5

General Tolerances JED-261

Class 1)	Range of Nominal Dimensions (± mm) ≤ 50	> 50 ≤ 180	> 180 ≤ 400	> 400	∢
Fine	0.5	1.0	1.5	2.0	±3°
Medium	1.0	2.0	3.0	4.0	
Coarse	2.0	3.5	5.0	6.5	

Tapped Holes acc.
1) Tolerance Class Applied Crossmarked

Copyright WABCO®

Date	Signature
Drawn 2018-09-24	Saravanan
Checked 2018-09-24	Vallarasu
Expert THOMAS BILSING	

WABCO

LEVELLING VALVE

Mass	Scale	Material No.	Date of first issue: 2016-12-14
0.212 KG	1:1 (2:1)	PRO 007 030 0	Doc.Code 005 / Language EN / Sheet 1/1
Size A 1	CAD System CREO	ECN-No. 177205 / Revision 1 A / Techn. Resp. 5642_AM	Replacement for -

100mm

Non è permesso consegnare a terzi o riprodurre questo documento, né utilizzare il contenuto o renderlo comunque noto a terzi senza autorizzazione esplicita. Ogni infrazione costituisce un evidente abuso e comporterà il risarcimento dei danni subiti. E' fatta riserva di tutti i diritti derivanti da brevetti o modelli.

Copying of this document and giving it to others and the use or communication of the contents thereof, are forbidden without express authority. Contraction of this restriction will constitute an evident abuse and result in the liability to the payment of damages. All rights are reserved in the event of the grant of patent or registration of a utility model or design. This document is the subject of copyright.

Toute Communication ou reproduction de ce document, toute exploitation ou communication de son contenu sont interdites, sauf autorisation expresse. Tout manquement à cette règle constitue un abus évident et expose son auteur au versement de dommages et intérêts. Tous droits de propriété industrielle réservés, notamment en matière de brevets et de modèles.

Weitergabe sowie Vervielfältigung dieser Unterlage, Verwertung und Mitteilung ihres Inhalts nicht gestattet, soweit nicht ausdrücklich zugestanden. Zuwiderhandlungen stellen einen offensichtlichen Mißbrauch dar und verpflichten zu Schadenersatz. Alle Rechte für den Fall der Patenterteilung oder Gebrauchsmustereintragung vorbehalten.