<1> SAFETY CHARACTERISTICS	0
<2> SIGNIFICANT CHARACTERISTICS	0

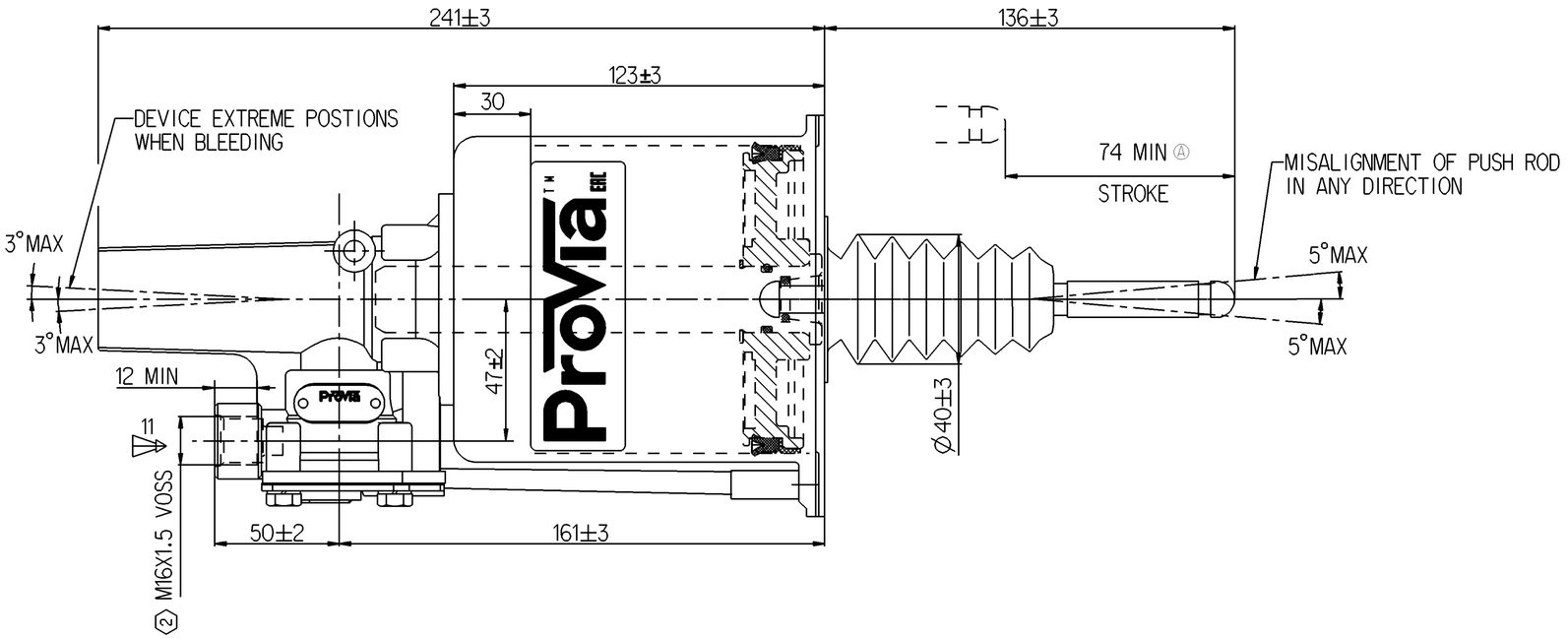

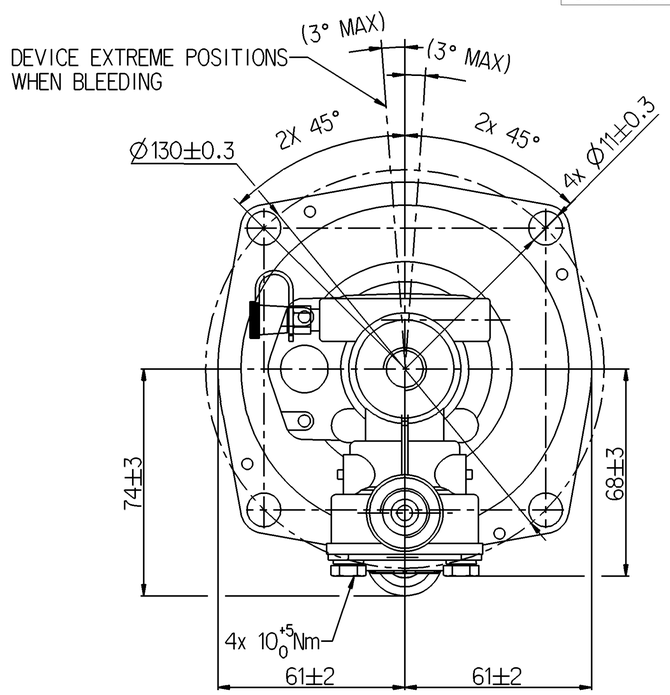

SCHEMATIC DIAGRAM

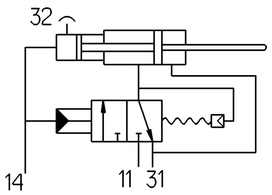

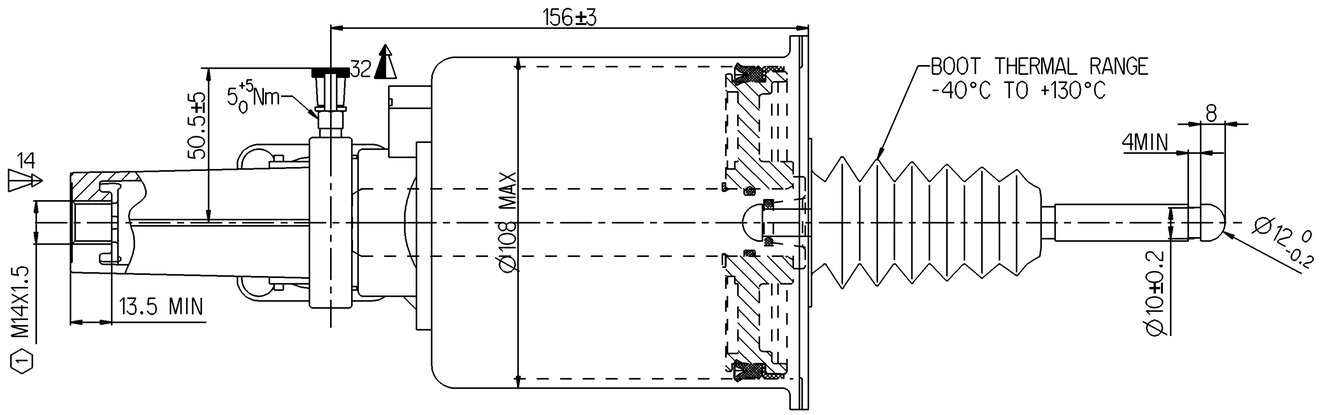

MARKING OF PORTS
11-AIR INLET
14-OIL INLET
31-AIR EXHAUST
32-BLEED SCREW

NOTES
1. HYDRAULIC TANK DIA. : Ø22mm
2. AIR TANK DIA. : Ø102mm
3. HYDRAULIC WORKING PRESSURE : 4MPa
4. HYDRAULIC WORKING PRESSURE MAX : 12MPa
5. AIR WORKING PRESSURE MAX : 1MPa
6. WORKING TEMPERATURE : -40°C ~ +80°C
7. WORKING MEDIUM : BRAKE OIL , AIR

① TORQUE : 25 Nm MAX

② TORQUE : 34 Nm MAX

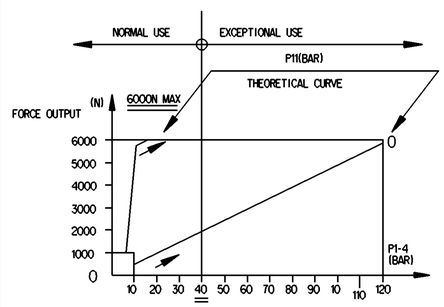

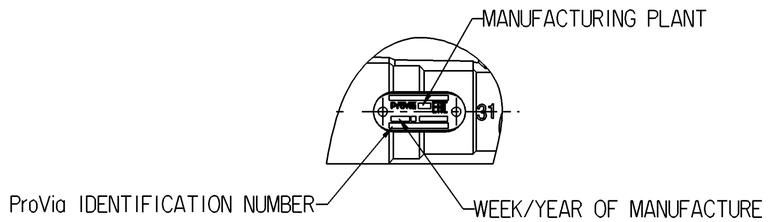

NAME PLATE DETAILS

General Specification: JED-334-1 , Size ISO 14405 LP					
Further Technical Data: PRO 411 000 0					
Doc. Code: 043		Sheet: 1 To 5			
General Tolerances JED-261					
Range of Nominal Dimensions (± mm)					
Class 1)	≤ 50	> 50 ≤ 180	> 180 ≤ 400	> 400	∢
Fine	0.5	1.0	1.5	2.0	
Medium	1.0	2.0	3.0	4.0	±3°
Coarse	2.0	3.5	5.0	6.5	
Topped Holes acc. -					
1) Tolerance Class Applied Crossmarked					

Copyright WABCO®

Date	Signature
Drawn 2019-12-16	Shanmugam S
Checked 2019-12-16	Yerahachelvan
Expert Thomas Bilsing	

ProVia
CLUTCH SERVO

Mass	Scale	Material No.	Date of first issue: 2019-05-14		
2.7 KG	NTS	PRO 411 020 0	Doc.Code 005	Language EN	Sheet 1/1
Size A 1	CAD System CREO	ECN-No. 503356 / Revision 1 A / Techn. Resp. 5630_AM	Replacement for -		

100mm