<1>	SAFETY CHARACTERISTICS	0
<2>	SIGNIFICANT CHARACTERISTICS	0

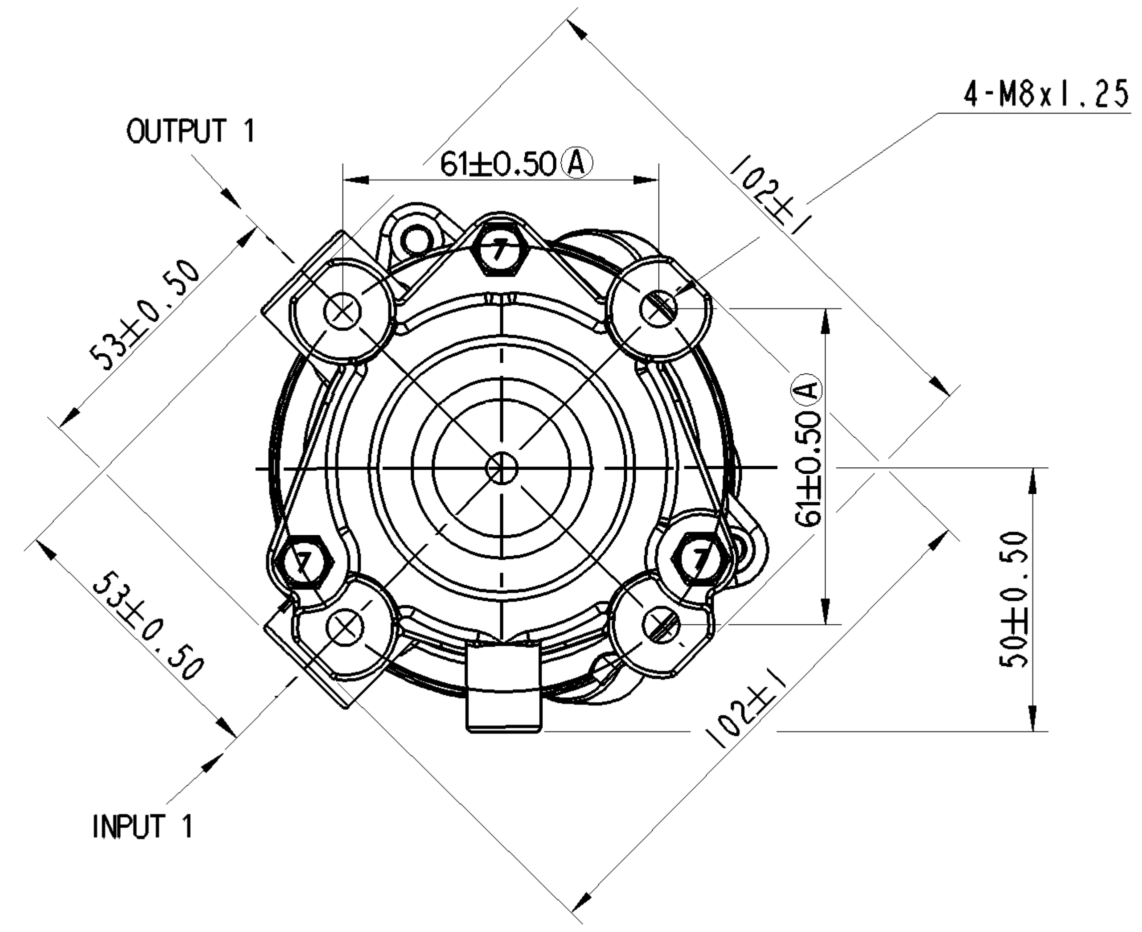

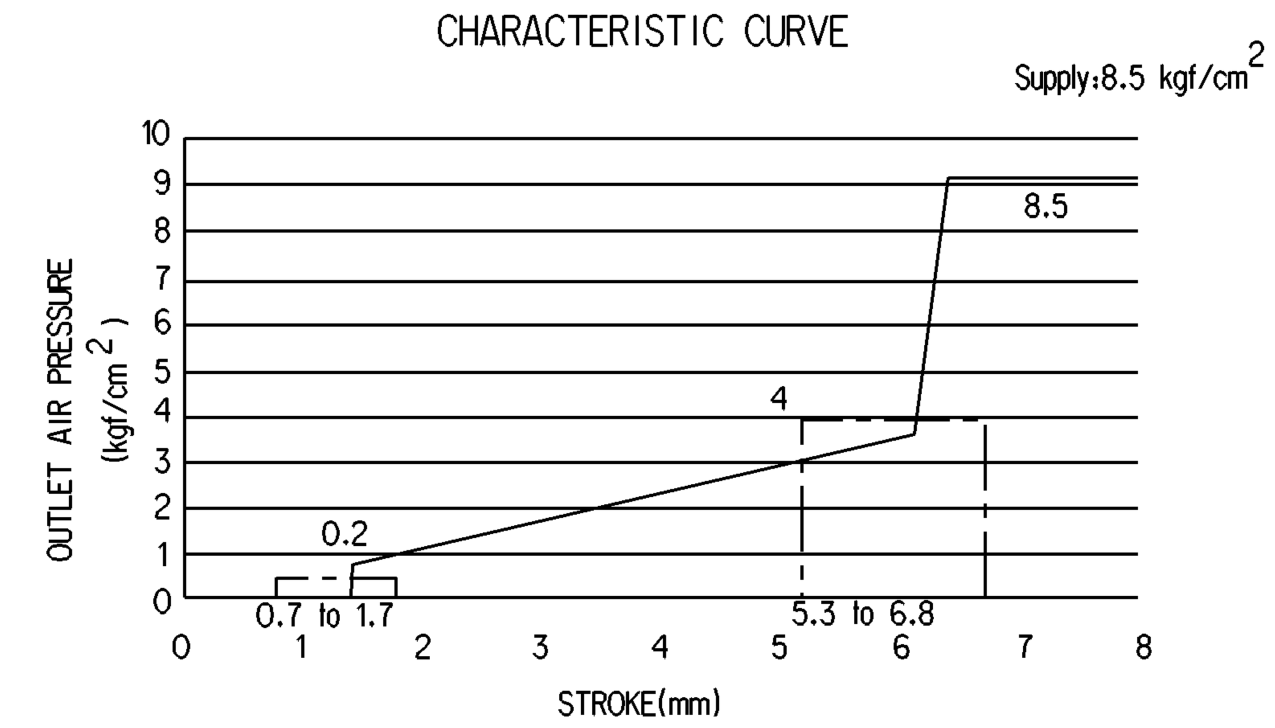

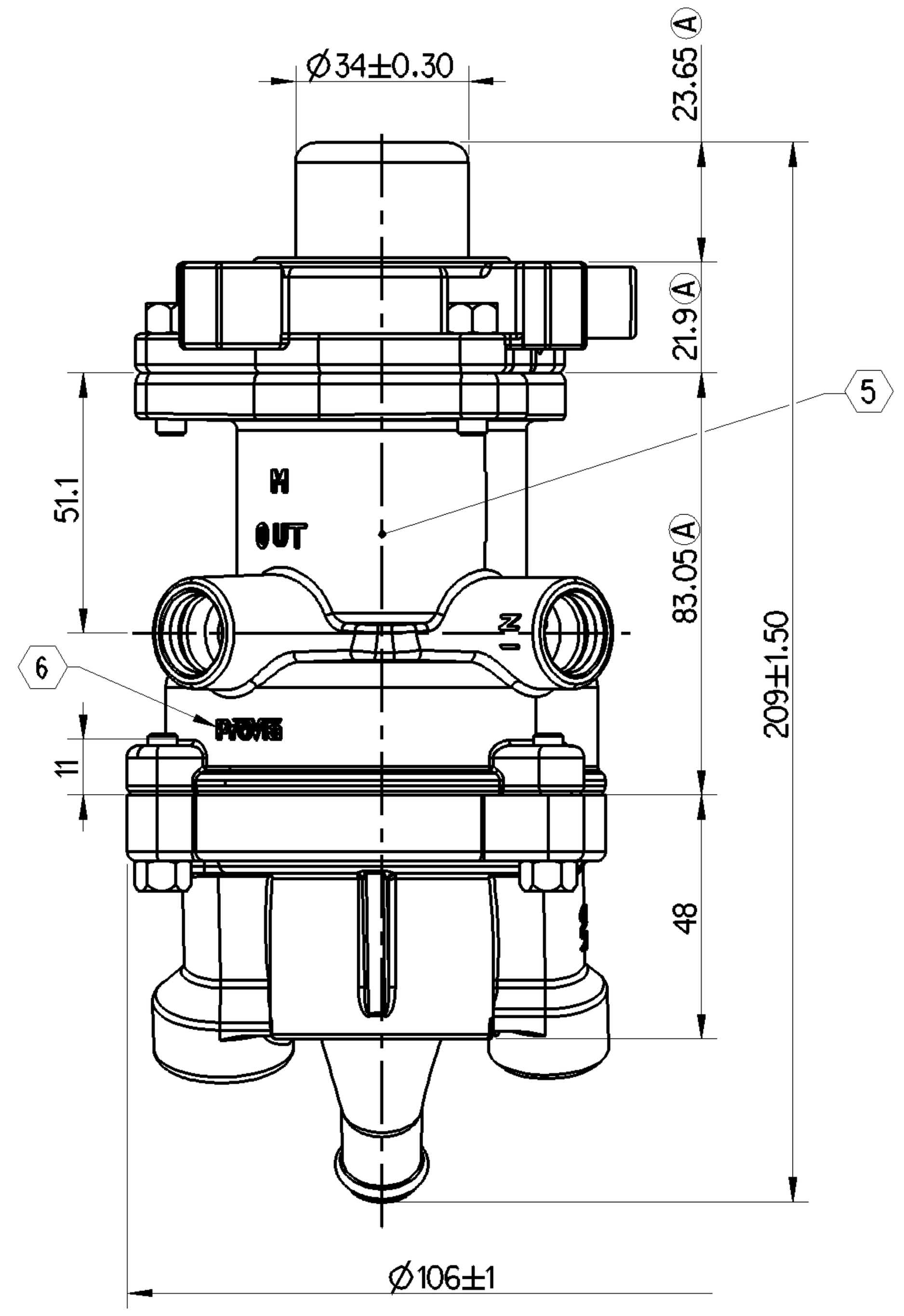

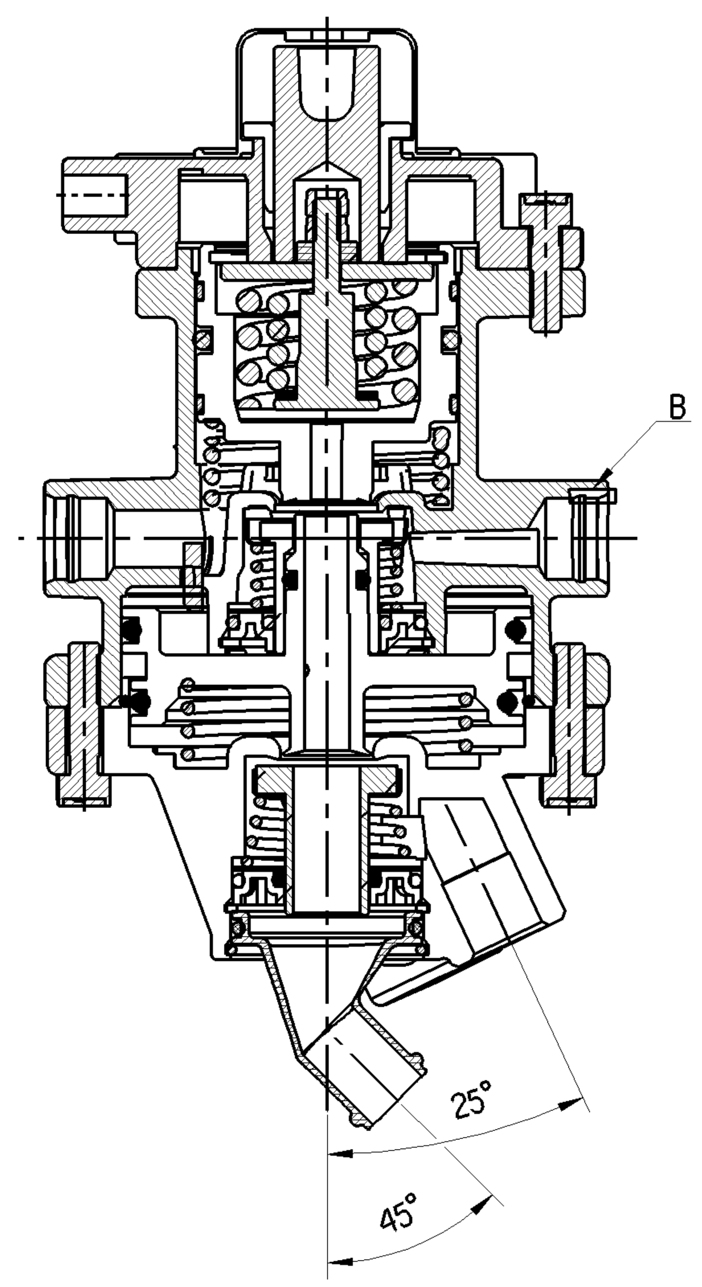

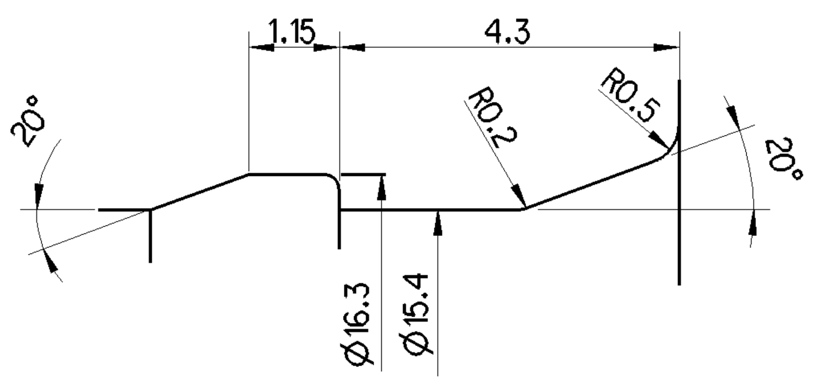

DETAIL X

SCALE 5 : 1

1.) AIR LEAK TEST (NORMAL TEMPERATURE)

1-1.STATIC : OUT AIR PRESSURE 7.0 kgf/cm^2

LEAKAGE :WITHIN 3 sec. < 30pa

1-2. DYNAMIC : OUT AIR PRESSURE 7.0 kgf/cm^2

LEAKAGE : WITHIN 3 sec.<30pa

2.) TIGHTENINIG TORGUE

2-1. NO.26.36 M6 BOLT : 5.9 ~7.4 N-m

3.) MAXIMUM SUPPLY PRESSURE : 10 kgf/cm^2

4.) TEMPERATURE RANGE -10° TO +80°C

⟨5⟩ STICKER PASTING LOCATON

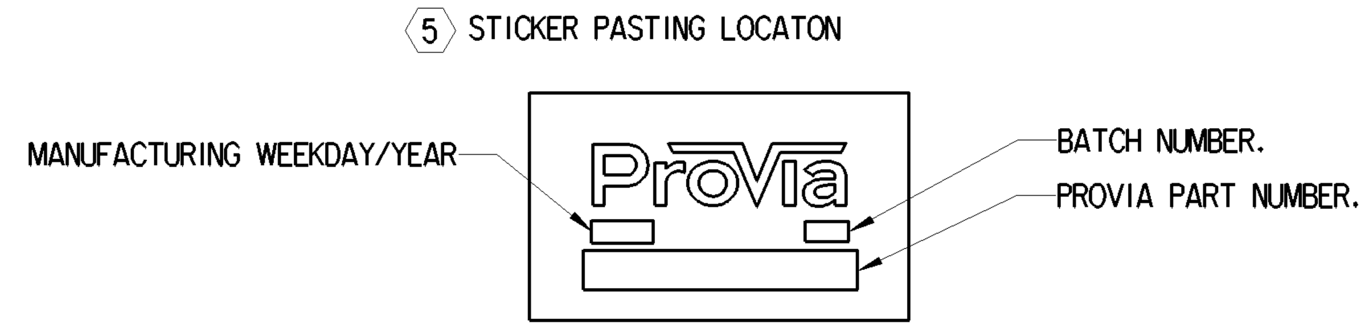

⟨6⟩ LOGO SIZE : 24 x 6

FOR PROVIA LOGO SPECIFICATION REFER JED-868

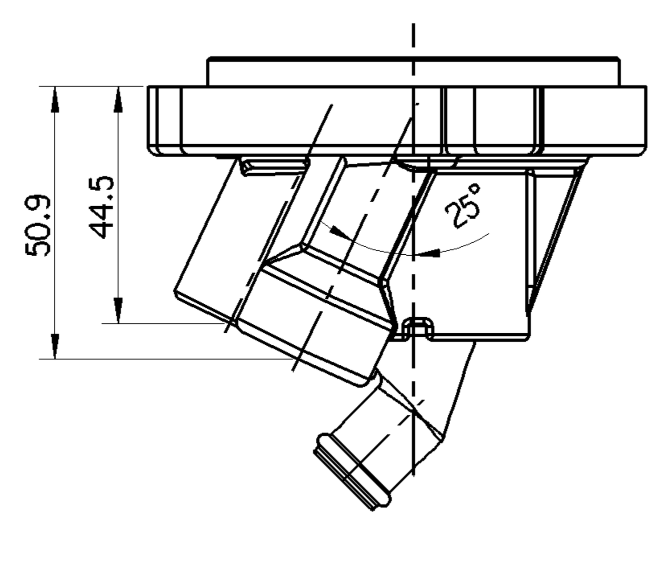

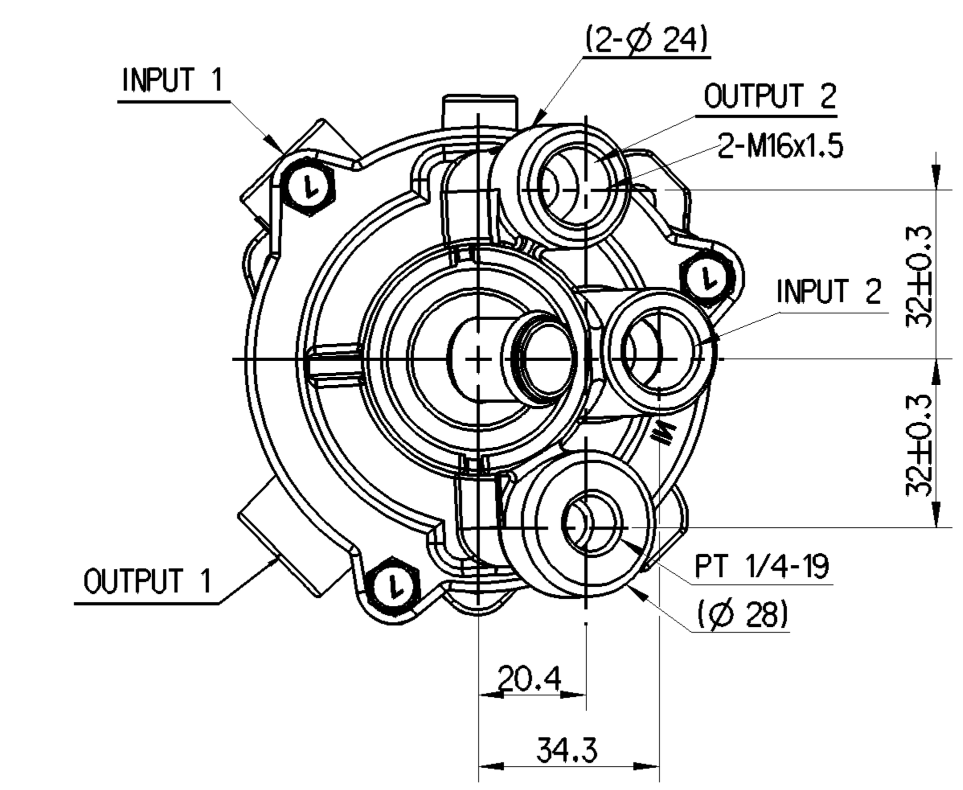

Toute Communication ou reproduction de ce document, toute exploitation ou communication de son contenu sont interdites, sauf autorisation expresse. Tout manquement a cette regle constitue un abus evident et expose son auteur au versement de dommages et interets. Tous droits de propriete industrielle reserves, notamment en matiere de brevets et de modeles.

Non e permesso consegnare a terzi o riprodurre questo documento, ne utilizzarne il contenuto o renderlo comunque noto a terzi senza autorizzazione esplicita. Ogni infrazione costituira un evidente abuso e comportera il risarcimento dei danni subiti. E'fatta riserva di tutti i diritti derivanti da brevetti o modelli.

Weitergabe sowie Vervielfaeltigung dieser Unterlage, Verwertung und Mitteilung ihres Inhalts nicht gestattet, soweit nicht ausdruecklich zugestanden. Zuwiderhandlungen stellen einen offensichtlichen Missbrauch dar und verpflichten zu Schadenersatz. Alle Rechte fuer den Fall der Patenterteilung oder Gebrauchsmuster-Eintragung vorbehalten.

Copying of this document and giving it to others and the use or communication of the contents thereof, are forbidden without express authority. Contravention of this restriction will constitute an evident abuse and result in a liability to the payment of damages. All rights are reserved in the event of the grant of patent or registration of a utility model or design. This document is the subject of copyright.

General Specification: JED-334-1 , Size ISO 14405 LP						
Further Technical Data: PRO 315 002 0						
Doc. Code: 035			Sheet: 01 To 06			
General Tolerances JED-261						
		Range of Nominal Dimensions (± mm)				
Class 1)		≤ 50	> 50 ≤ 180	> 180 ≤ 400	> 400	∢
Fine		0.5	1.0	1.5	2.0	
Medium	X	1.0	2.0	3.0	4.0	±3°
Coarse		2.0	3.5	5.0	6.5	
Tapped Holes acc.						
1) Tolerance Class Applied Crossmarked						

Copyright WABCO®

Date	Signature
Drawn	
2018-10-23	Senthil
Checked	
2018-10-24	Aswinkumar
Expert	
Suresh Gayakwad	

ProVia

FOOT BRAKE VALVE

Mass	Scale	Material No.	Date of first issue: 2018-07-18		
1.38 KG	1:1	PRO 315 002 0	Doc.Code 005	Language EN	Sheet 1/1
Size	CAD System	ECN-No.	Revision	Techn. Resp.	Replacement for
A 1	CREO	178957	5x A	5180_AM	-

100mm