<1>	SAFETY CHARACTERISTICS	0
<2>	SIGNIFICANT CHARACTERISTICS	0
<CI>	CUSTOMER INTERFACE	6

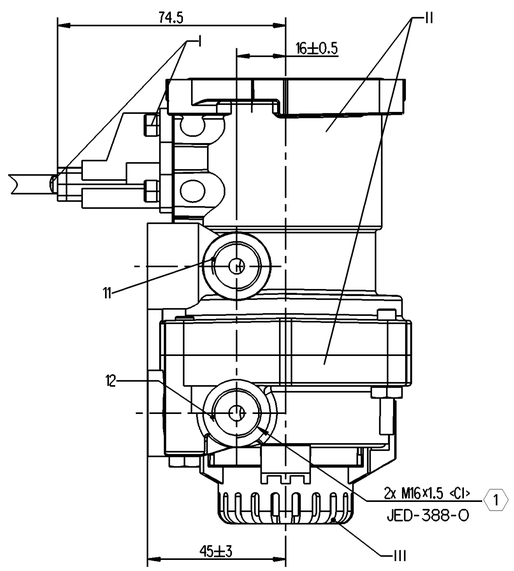

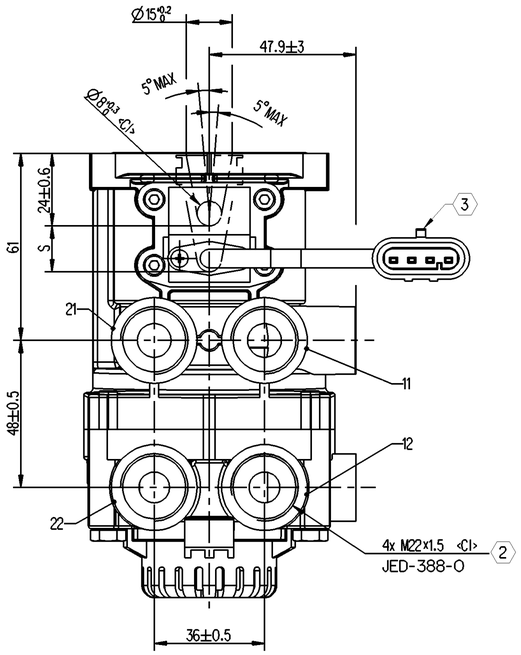

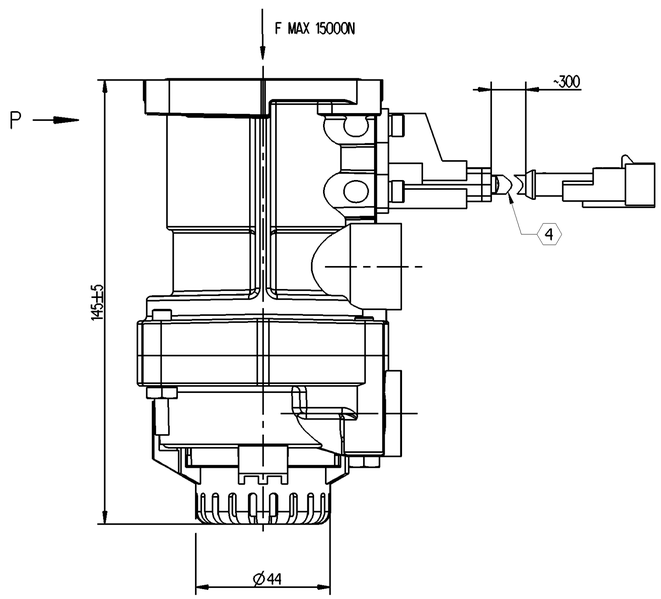

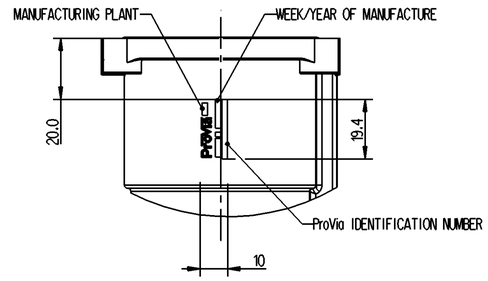

VIEW-P

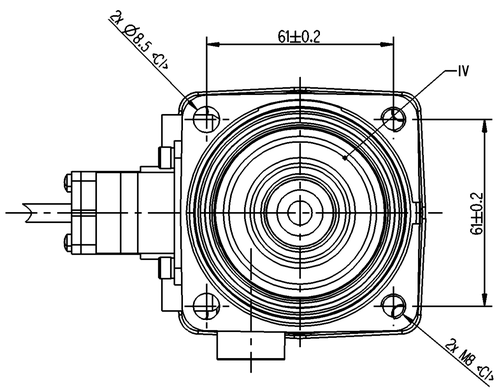

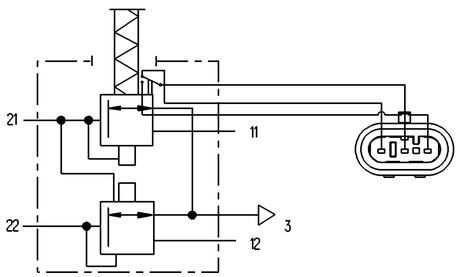

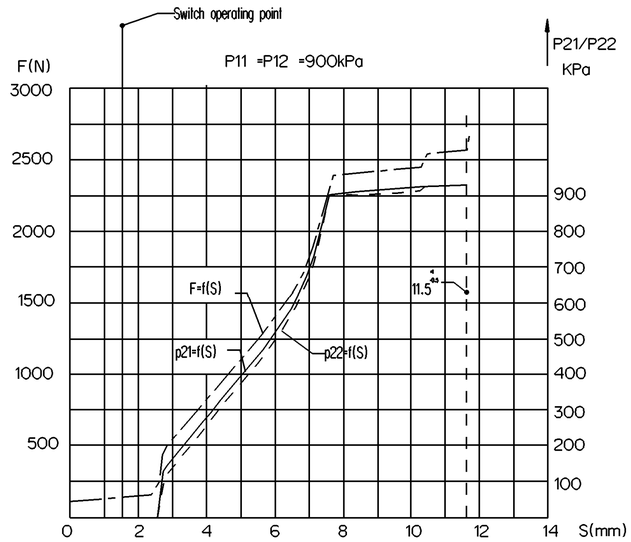

TECHNICAL DATA

S.No.	NOTES	
1	PRODUCT FUNCTION AND RELIABILITY	
2	WORKING MEDIUM	AIR
3	NORMAL WORKING PRESSURE	10 bar
4	MAXIMUM WORKING PRESSURE	12 bar
5	NOMINAL DIAMETER (78.5 mm sq)	Ø10 mm
6	THERMAL RANGE OF APPLICATION	-40°C TO +80°C
7	NOISE LEVEL	≤82 dBA (A)
8	DEGREE OF PROTECTION	IP65

(1) TORQUE 34Nm MAX

(2) TORQUE 53Nm MAX

(3) CONNECTOR MODEL AMP282104-1 <CI>
MATCHING MODEL AMP282080-1

(4) WIRE SPECIFICATION : 0.5mm²
WORKING CURRENT : 0.5A
WORKING VOLTAGE : 24V DC

MATERIAL AND SURFACE PROTECTION

S.No.	MATERIAL	SURFACE PROTECTION
I	STEEL	ZINC PLATED
II	ALUMINIUM ALLOY	CHROMA TED
III	PLASTIC	NO TREATMENT
IV	RUBBER	NO TREATMENT

AT FAILURE CIRCUIT 1: NECESSARY STROKE S ≥ 13 mm
NECESSARY FORCE F= 4100 N

11/12 SUPPLY

21/22 OUTLET

3 EXHAUST

General Specification: ISO 8015, JED-334-1, Size ISO 14405 LP
Further Technical Data: PRO 315 010 0
Doc. Code: 035 Sheet: 1 To 8

General Tolerances JED-261

Class 1)	Range of Nominal Dimensions (± mm) ≤ 50	> 50 ≤ 180	> 180 ≤ 400	> 400	∢
Fine	±0.5	±1	±1.5	±2	
Medium	X ±1	±2	±3	±4	±3°
Coarse	±2	±3.5	±5	±6.5	

Tapped Holes acc.JED-388

1) Tolerance Class Applied Crossmarked

Copyright WABCO®

Date	Signature
Drawn 2022-09-28	Saravanan
Checked 2022-10-06	Manivannan

Dimensions in mm

ProVia

FOOT BRAKE VALVE

Mass	Scale	Material No.	Date of first issue: 2022-08-03		
1.1 kg	1:1	PRO 315 014 0	Doc.Code 005	Language EN	Sheet 1/1
Size A 1	CAD System CREO	EDM-No. 512341	Revision 1x A	Techn. Resp. 5180_AM	Replacement for -

100mm

Toute Communication ou reproduction de ce document, toute exploitation ou communication de son contenu sont interdites, sauf autorisation écrite. Tous droits de propriété industrielle réservés, notamment en matière de brevets et de modèles.

Weitergabe sowie Vervielfältigung dieser Unterlage, Verwertung und Mitteilung ihres Inhalts nicht gestattet, soweit nicht ausdrücklich zugesichert. Zuwiderhandlungen verpflichten zu Schadensersatz. Alle Rechte für den Fall der Patent-, Gebrauchsmuster- oder Geschmacksmustereintragung vorbehalten.

Non è permesso consegnare a terzi o riprodurre questo documento, né utilizzarne il contenuto o renderlo comunque noto a terzi senza autorizzazione scritta. Tutti i diritti di proprietà industriale sono riservati, in particolare quello di brevetto o modello.

Copying of this document and giving it to others and the use or communication of the contents thereof, are forbidden without express authority. Offenders are liable to the payment of damages. All rights are reserved in the event of the grant of patent or registration of a utility model or design. This document is the subject of copyright.