Toute Communication ou reproduction de ce document, toute exploitation ou communication de son contenu sont interdites, sauf autorisation expresse. Tout manquement a cette regle constitue un abus evident et expose son auteur au versement de dommages et interets. Tous droits de propriete industrielle reserves, notamment en matiere de brevets et de modeles.

Weitergabe sowie Vervielfaeltigung dieser Unterlage, Verwertung und Mitteilung ihres Inhalts nicht gestattet, soweit nicht ausdrueckliich zugestanden. Zuwiderhandlungen stellen einen offensichtlichen Missbrauch dar und verpflichten zu Schadenersatz. Alle Rechte fuer den Fall der Patenterteilung oder Gebrauchsmuster-Eintragung vorbehalten.

Non e permesso consegnare a terzi o riprodurre questo documento, ne utilizzarne il contenuto o renderlo comunque noto a terzi senza autorizzazione esplicita. Ogni infrazione costituira un evidente abuso e comportera il risar cimento dei danni subiti. E'fatta riserva di tutti i diritti derivanti da brevetti o modelli.

Copying of this document and giving it to others and the use or communication of the contents thereof, are forbidden without express authority. Contravention of this restriction will constitute an evident abuse and result in a liability to the payment of damages. All rights are reserved in the event of the grant of patent or registration of a utility model or design. This document is the subject of copyright.

<1> SAFETY CHARACTERISTICS	0
<2> SIGNIFICANT CHARACTERISTICS	0
<CI> CUSTOMER INTERFACE	0

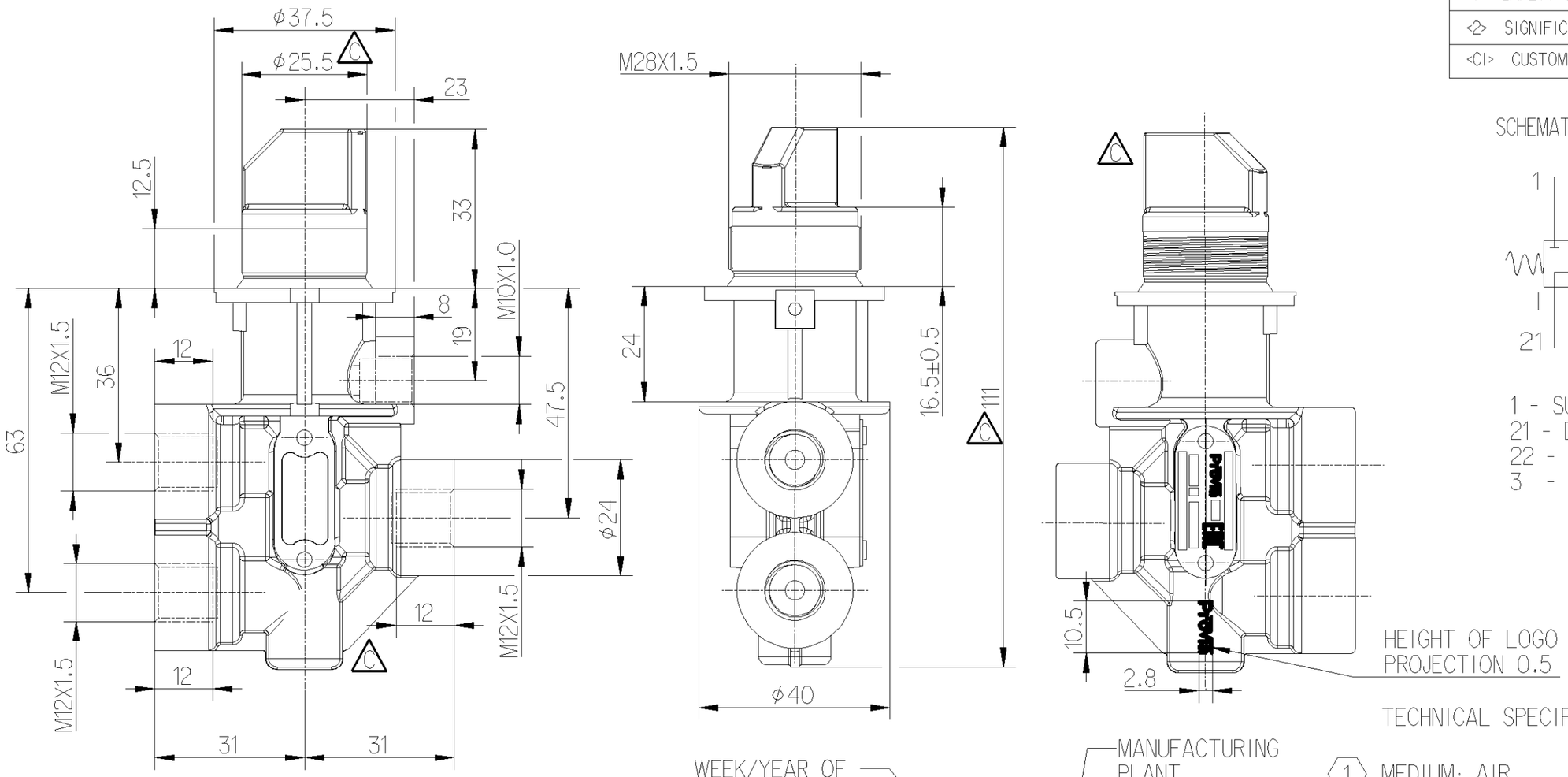

SCHEMATIC DIAGRAM

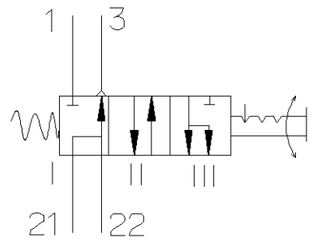

1 - SUPPLY
21 - DELIVERY
22 - DELIVERY
3 - EXHAUST

TECHNICAL SPECIFICATION :

1. MEDIUM: AIR
2. WORKING PRESSURE MAX: 11 BAR
3. NOMINAL APERTURE ≥ 4mm
4. WORKING TEMPERATURE: -25° ~ +80° C
5. OTHERS: ACCORDING TO QC/T37

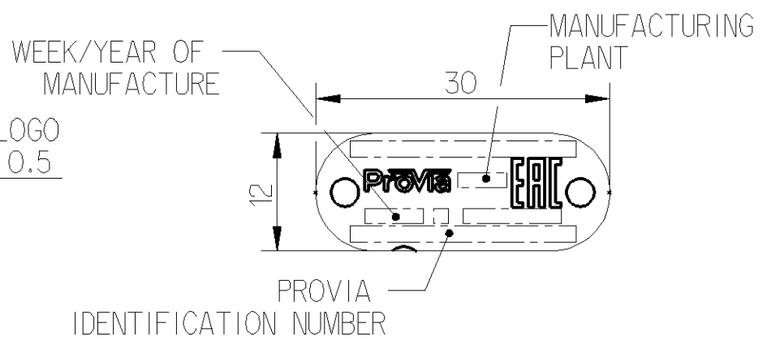

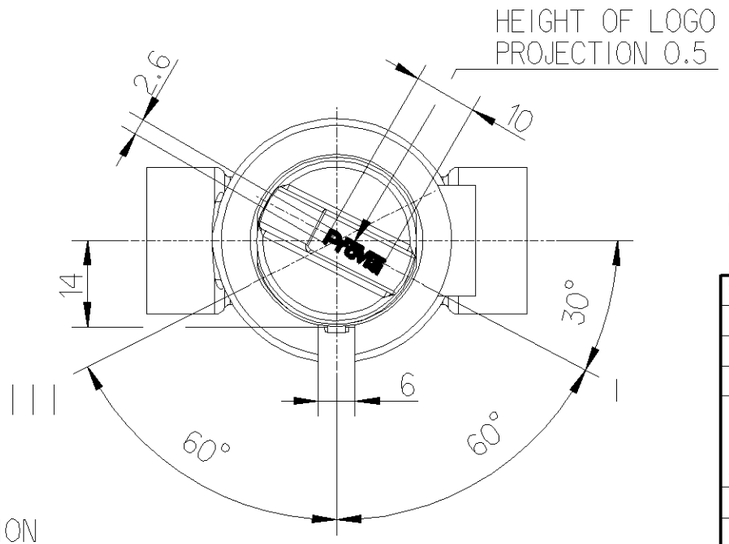

I - CLOSED POSITION
II - PORT 21 PRESSURIZED
III - PORT 21 AND 22 PRESSURIZED

General Specification: ISO 8015, JED-334-1, Size ISO 14405 LP						
Further Technical Data: Product Specification						
Doc. Code: 035		Sheet: 1 To 4				
General Tolerances JED-261						
		Range of Nominal Dimensions (± mm)				
Class	1)	≤ 50	> 50 ≤ 180	> 180 ≤ 400	> 400	∡
Fine		±0.5	±1	±1.5	±2	±3°
Medium	X	±1	±2	±3	±4	
Coarse		±2	±3.5	±5	±6.5	
Tapped Holes acc. JED-152						
1) Tolerance Class Applied Crossmarked						

Copyright ZF®			
Date	Signature		
Drawn			
2023-04-12	Pawlowski		
Checked			
2023-04-18	Pakula		
Dimensions in mm			
Mass	Scale	Material No.	
0.3 kg	NTS	PRO 037 001 0	
Size	CAD System		
A 3	CREO	ECN-No. 513902	Revision 4 x C
		Techn. Resp. 5810_AM	

ProVia

DIRECTIONAL CONTROL VALVE

Date of first issue: 2022-12-21		
Doc.Code	Language	Sheet
005	EN	1/1

Replacement for

100mm