<1> SAFETY CHARACTERISTICS	0
<2> SIGNIFICANT CHARACTERISTICS	0

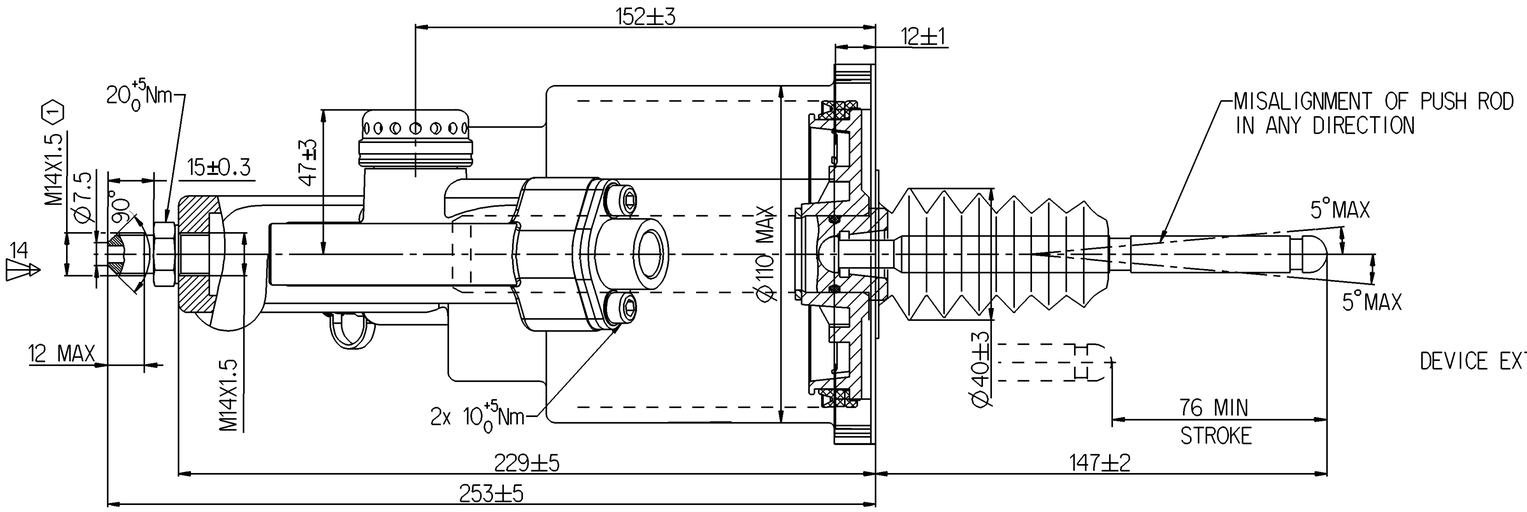

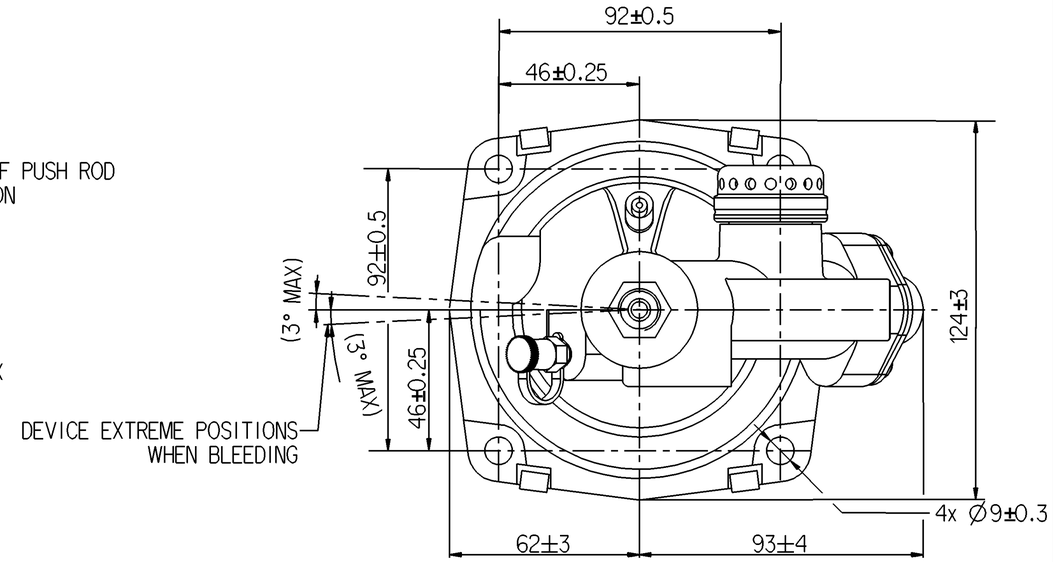

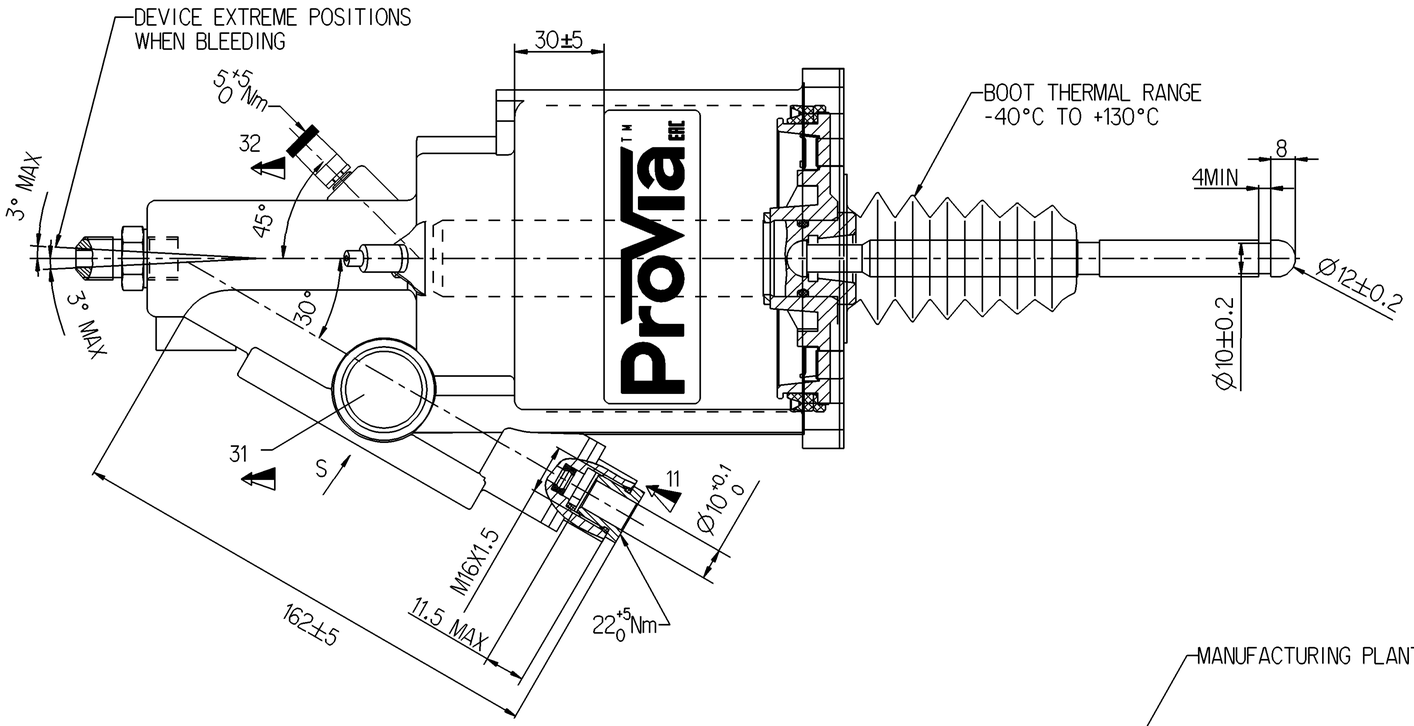

SCHEMATIC DIAGRAM

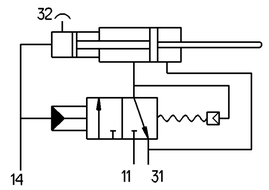

MARKING OF PORTS
11-AIR INLET
14-OIL INLET
31-AIR EXHAUST
32-BLEED SCREW

NOTES
1. HYDRAULIC TANK DIA. : Ø25mm
2. AIR TANK DIA. : Ø100mm
3. HYDRAULIC WORKING PRESSURE : 4MPa
4. HYDRAULIC WORKING PRESSURE MAX : 12MPa
5. AIR WORKING PRESSURE MAX : 1MPa
6. WORKING TEMPERATURE : -40°C ~ +80°C
7. WORKING MEDIUM : BRAKE OIL , AIR

(1) TORQUE : 25 Nm MAX

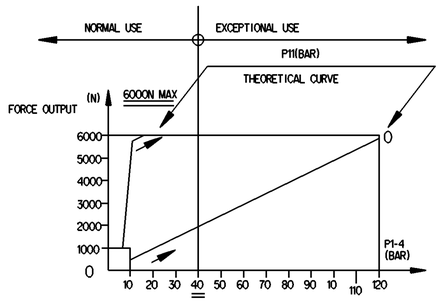

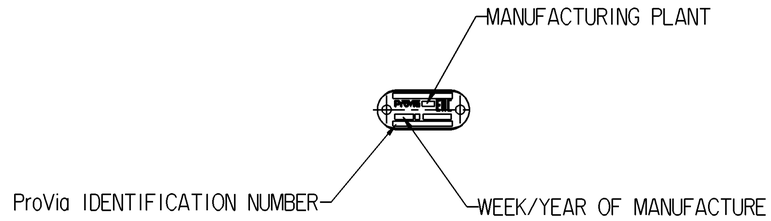

S
NAME PLATE DETAILS

General Specification: JED-334-1 , Size ISO 14405 LP						
Further Technical Data: PRO 411 000 0						
Doc. Code: 043			Sheet: 1 To 5			
General Tolerances JED-261						
Class 1)	Range of Nominal Dimensions (± mm) ≤ 50	> 50 ≤ 180	> 180 ≤ 400	> 400		
Fine	0.5	1.0	1.5	2.0	±3°	
Medium	1.0	2.0	3.0	4.0		
Coarse	2.0	3.5	5.0	6.5		
Tapped Holes acc. -						
1) Tolerance Class Applied Crossmarked						

Copyright WABCO®

Date	Signature
Drawn 2019-05-28	Shanmugam S
Checked 2019-05-28	Yerahachelvan
Expert	Thomas Bilsing

ProVia

CLUTCH SERVO

Mass	Scale	Material No.	Date of first issue: 2019-05-28		
2.6 KG	NTS	PRO 411 030 0	Doc.Code 005	Language EN	Sheet 1/1
Size A 1	CAD System CREO				

EON-No.	Revision	Techn. Resp.	Replacement for
-	-	5630_AM	-

100mm

Non è permesso consegnare o fare o riprodurre questo documento, né utilizzare il contenuto o rendere comunque noto a terzi senza esplicita autorizzazione. Tutti i diritti derivanti da brevetti o modelli.
È fatto riserva di tutti i diritti derivanti da brevetti o modelli.

Copying of this document and giving it to others and the use or communication of the contents thereof, are forbidden without express authority. Offenders are liable to the payment of damages. All rights are reserved in the event of the grant of patent or registration of a utility model or design. This document is the subject of copyright.

Toute Communication ou reproduction de ce document, toute exploitation ou communication de son contenu sont interdites, sauf autorisation expresse. Tous droits de propriété industrielle réservés, notamment en matière de brevets et de modèles.

Weitergabe sowie Vervielfältigung dieser Unterlage, Verwertung und Mitteilung ihres Inhalts nicht gestattet, soweit nicht ausdrücklich zugestanden. Zuwiderhandlungen verpflichten zu Schadensersatz. Alle Rechte vorbehalten, insbesondere für den Patentanspruch oder die Eintragung von Gebrauchsmustern.