| | |
|---|---|
| <1> SAFETY CHARACTERISTICS | 0 |
| <2> SIGNIFICANT CHARACTERISTICS | 0 |
| <CI> CUSTOMER INTERFACE | 11 |

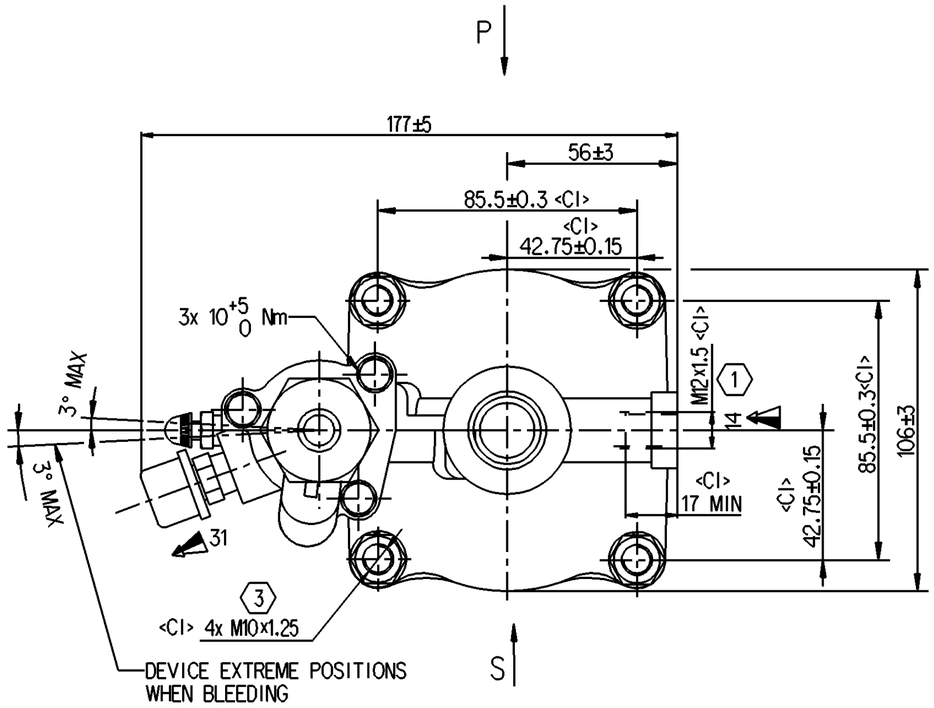


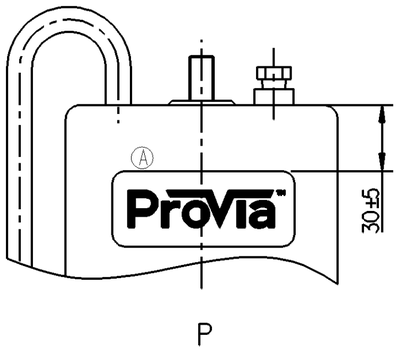


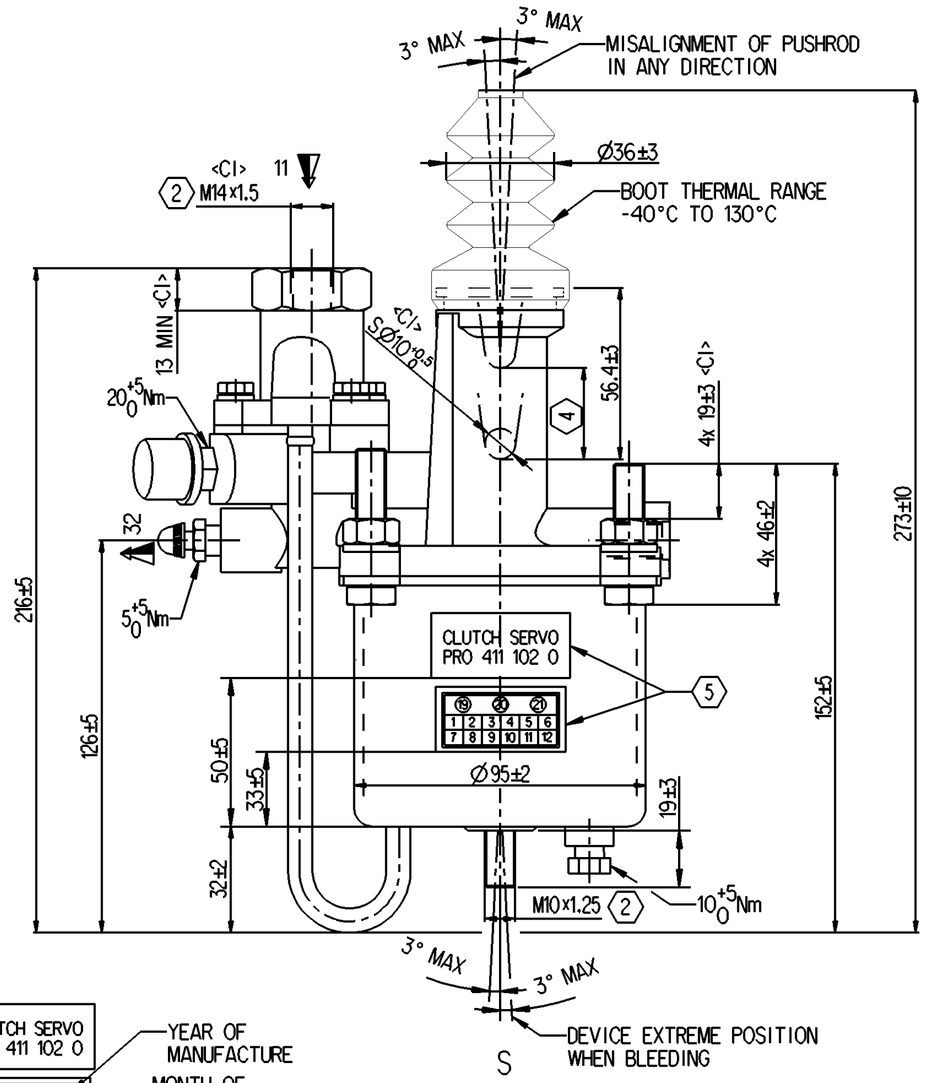


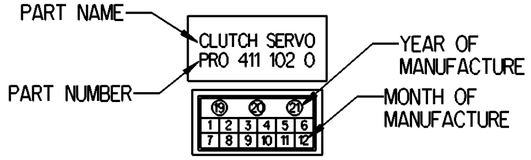


5 STICKER DETAILS

SCHEMATIC DIAGRAM

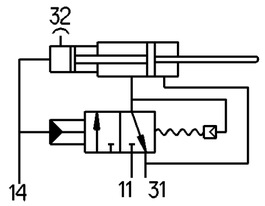


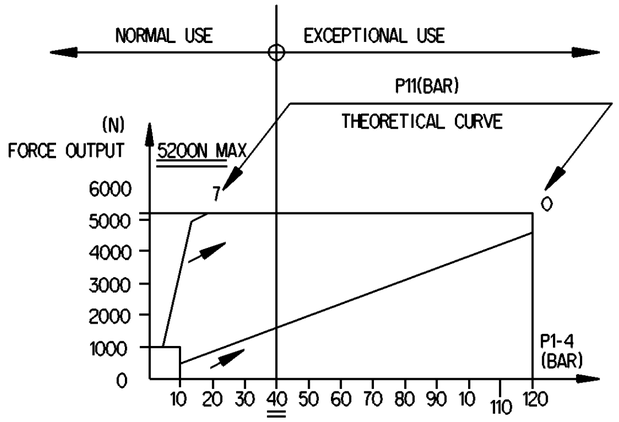


NOTES:
1.HYDRAULIC TANK DIA: Ø22.22mm;
2.AIR TANK DIA: Ø90mm;
3.HYDRAULIC WORKING PRESSURE: 4MPa;
4.HYDRAULIC WORKING PRESSURE MAX: 12MPa;
5.AIR WORKING PRESSURE MAX: 1MPa ;
6.WORKING TEMPERATURE: -40 TO +80°C;
7.MEDIUM: BRAKE OIL, AIR
4 8.STROKE LENGTH: 35±3mm

1 TORQUE 21Nm MAX
2 TORQUE 25Nm MAX
3 TORQUE 44Nm MAX

MARKING OF PORTS
11-AIR INLET
14-OIL INLET
31-AIR EXHAUST
32-BLEED SCREW

| | | | | | | |
|---|---|---|---|---|---|---|
| General Specification: JED-334-1 , Size ISO 14405 LP | | | | | | |
| Further Technical Data: PRO 411 100 0 | | | | | | |
| Doc. Code: 035 | | | Sheet: 1 To 5 | | | |
| General Tolerances JED-261 | | | | | | |
| | | Range of Nominal Dimensions ( ± mm) | | | | |
| Class 1) | | ≤ 50 | > 50 ≤ 180 | > 180 ≤ 400 | > 400 | |
| Fine | | 0.5 | 1.0 | 1.5 | 2.0 | ±3° |
| Medium | X | 1.0 | 2.0 | 3.0 | 4.0 | |
| Coarse | | 2.0 | 3.5 | 5.0 | 6.5 | |
| Tapped Holes acc. - | | | | | | |
| 1) Tolerance Class Applied Crossmarked | | | | | | |

Copyright WABCO®

| | |
|---|---|
| Date | Signature |
| Drawn 2020-09-23 | M.P. |
| Checked 2020-10-06 | Yerahachelvan |
| Expert Thomas Bilsing | |

ProVia

CLUTCH SERVO - 90 mm

| Mass | Scale | Material No. | Date of first issue: 2020-04-03 | | |
|---|---|---|---|---|---|
| 2.89 KG | NTS | PRO 411 102 0 | Doc.Code 005 | Language EN | Sheet 1/1 |
| Size A 2 | CAD System CREO | ECN-No. 505802 | Revision 1x A | Techn. Resp. 5630_AM | Replacement for - |

100mm

Non è permesso consegnare a terzi o riprodurre questo documento, ne utilizzarne il contenuto o renderlo comunque noto a terzi senza autorizzazione esplicita. Ogni infrazione costituirà un evidente abuso e comporterà il risarcimento dei danni subiti. E' fatta riserva di tutti i diritti derivanti da brevetti o modelli.

Copying of this document and giving it to others and the use or communication of the contents thereof, are forbidden without express authority. Contravention of this restriction will constitute an evident abuse and result in a liability to the payment of damages. All rights are reserved in the event of the grant of patent or registration of a utility model or design. This document is the subject of copyright.

Toute Communication ou reproduction de ce document, toute exploitation ou communication de son contenu sont interdites, sauf autorisation expresse. Tout manquement à cette règle constitue un abus évident et expose son auteur au versement de dommages et interêts. Tous droits de propriété industrielle réservés, notamment en matière de brevets et de modèles.

Weitergabe sowie Vervielfältigung dieser Unterlage, Verwertung und Mitteilung ihres Inhalts nicht gestattet, soweit nicht ausdrücklich zugesichert. Zuwiderhandlungen stellen einen offensichtlichen Missbrauch dar und verpflichten zu Schadensersatz. Alle Rechte für den Fall der Patenterteilung oder Gebrauchsmuster-Eintragung vorbehalten.