| MATERIAL AND SURFACE PROTECTION | | | | | |
|---|---|---|---|---|---|
| a | PA6.6 35% GF | e | PA6.6 35% GF | j | NBR |
| b | ZN / C | f | St / ZN | k | AL |
| c | 8.8 / ZN | g | St / painted | | |
| d | PA 6T/6I 30% GF | h | 10.9 / ZN | | |

THE VALVE CORRESPONDS TO THE REGULATIONS FOR ELECTROMAGNETIC DEVICES ACCORDING TO VDE 0580
DAS GERAET ENTSPRICHT DEN BESTIMMUNGEN FUER ELEKTROMAGNETISCHE GERAETE NACH VDE 0580
LA VALVE CORRESPOND AUX CONDITIONS POUR DES APPAREILS ELECTROMAGNETIQUES SUIVANT VDE 0580
LA VALVOLA CORRESPONDE ALLE CONDIZIONI PER APPARECCHI ELEKROMAGNETICHI DECONDO VDE 0580

1.1 WORKING MEDIUM : AIR (CONTAINING WATER, OIL AND ALCOHOL)
ARBEITSMEDIUM : LUFT (WASSER, OEL- UND ALKOHOLHALTIG)
FLUIDE D'UTILISATION : AIR (CHARGE D'EAU, D'HUILE ET D'ALCOOL)
FLUIDO DI ESERCIZIO : ARIA (CONTENENTE ACQUA, OLIO ED ALCOOL)

1.2 AMBIENT MEDIUM : AIR (CONTAINING WATER AND SALT)
UMGEBUNGSMEDIUM: LUFT (WASSER- UND SALZHALTIG)
FLUIDE AMBIANT : AIR (CHARGE D'EAU ET DE SEL)
FLUIDO AMBIENTE: ARIA (CONTENENTE ACQUA ED SALE)

2.1 THERMAL RANGE OF APPLICATION UNDER NORMAL AMBIENT CONDITIONS :
THERMISCHER ANWENDUNGSBEREICH UNTER NORMALEN UMGEBUNGSBEDINGUNGEN: -40°C...+80°C
GAMME D'APPLICATION THERMIQUE DANS CONDITIONS AMBIENTES NORMALES :
CAMPO TERMICO D'APPLICAZIONE NELLE NORMALI CONDIZIONI AMBIENTALI :

2.2 SHORT TERM RESISTANCE TO HEAT :
KURZZEITIGE WAERMEBESTAENDIGKEIT : MAX. 1h AT 110°C
RESISTANCE THERMIQUE TEMPORAIRE :
RESISTANZA TERMICA PER BREVE PERIODO:

3.1 WORKING PRESSURE (SUPPLY) :
BETRIEBSDRUCK (VORRAT) : $p_e$ = 5...13 bar
PRESSION D'UTILISATION (ALIMENTATION) :
PRESSIONE DI ESERCIZIO (ALIMENTAZIONE) :

3.2 MAX. DYNAMIC PRESSURE (DELIVERY) :
MAX. DYNAMISCHER DRUCK (ARBEITSLEITUNG: $p_e$ = 20 bar
PRESSION DYNAMIQUE MAXI.(UTILISATION) :
PRESSIONE DINAMICA MAX. (MANDATA) :

4.1 MIN. FLOW PASSAGE /NOMINAL DIAMETER
MIN. DURCHFLUSSOEFFNUNG /NENNWEITE
MIN. ORIFICE CALIBRE /DIAMETRE NOMINAL
MIN. PASSAGGIO LIBERO /DIAMETRO NOMINALE

4.2 PORT 21 :
ANSCHLUSS 21: 75 $mm^2$ (= Ø9.8mm)
ORIFICE 21 :
ORIFIZIO 21 :

4.3 PORT 22,23 :
ANSCHLUSS 22,23 : 38.5 $mm^2$
ORIFICE 22,23 : (=Ø 7mm)
ORIFIZIO 22,23 :

4.5 THROTTLE :
DROSSEL : 0.28 $mm^2$
ETRANGLEUR :(=Ø 0.6mm)
STROZZAMENTO:

4.4 PORT 11 :
ANSCHLUSS 11: MIN. 0.8 $mm^2$
ORIFICE 11 : (=Ø 1mm)
ORIFIZIO 11 :

4.6 PORT 3 :
ANSCHLUSS 3: MIN. 3.1 $mm^2$
ORIFICE 3 : (=Ø 2mm)
ORIFIZIO 3 :

5 TYPE OF CURRENT : DIRECT CURRENT
STROMART : GLEICHSTROM
NATURE DU COURANT : COURANT CONTINU
NATURA DELLA CORRENTE: CORRENTE CONTINUA

6 MAINTENANCE REQUIREMENTS: NONE
WARTUNGSANFORDERUNGEN : KEINE
ENTRETIEN : NON
MANUTENZIONE : NON

7 OPERATING VOLTAGE :
BETRIEBSSPANNUNG : 24V $^{+6V}_{-4.4V}$
TENSION DE SERVICE :
TENSIONE DI SERVIZIO:

8 INSTALLATION LIMITATIONS : DIRECTION A, B OR C MAY POINT UPWARDS
EINBAUBESCHRAENKUNGEN : RICHTUNG A, B ODER C NACH OBEN ZULAESSIG
RESTRICTIONS D'INSTALLATION : DIRECTION A, B OU C PEUT ETRE ORIENTEE VERS LE HAUT
LIMITAZIONE DI MONIAGGIO : DIREZIONE A, B O C ORIENTATA VERSO L'ALTO AMMESSA

9 SERVICE CONDITION : CONTINUOUS OPERATION
BETRIEBSART : DAUERBETRIEB
CONDITION DU SERVICE : SERVICE CONTINU
CONDIZONE DI SERVIZIO: SERVIZIO CONTINUO

10 SECURITY AGAINST THE CONFUSING OF POLES: EXISTING
VERPOLSICHERHEIT : VORHANDEN
DISPOSITIF DE TROMPEUR DE POLES : EXISTANT
SICUREZZA CONTRO L'INVERSIONE DEI POLI : ESISTENTE

11 RATED CURRENT AT ROOM TEMPERATURE :
NENNSTROM BEI RAUMTEMPERATUR : I = 0.34 A
COURANT NOMINAL A LA TEMPERATURE AMBIANTE :
CORRENTE NOMINALE ALLA TEMPERATURA AMBIENTE:

12 Imin AT ROOM TEMPERATURE (PER COIL): 0.27A
Imin BEI RAUMTEMPERATUR (JE SPULE): 0.27A
Imin A TEMPERATURE AMBIANTE (PAR BOBINE): 0.27A
Imin A TEMPERATURA AMBIANTE (PER BOBINA): 0.27A

13 Imax AT ROOM TEMPERATURE (PER COIL): 0.47A
Imax BEI RAUMTEMPERATUR (JE SPULE): 0.47A
Imax A TEMPERATURE AMBIANTE (PAR BOBINE): 047A
Imax A TEMPERATURA AMBIANTE (PER BOBINA): 0.47A

14 DEGREE OF PROTECTION ACCORDING TO DIN 40050:
SCHUTZART NACH DIN 40050 : IP 6K9K
DEGRE DE PROTECTION SUIVANT DIN 40050 :
GRADO DI PROTEZIONE SECONDO DIN 40050 :

15 PROTECTION CLASS :
SCHUTZKLASSE : III
CLASSE DE PROTECTION:
CLASSE DI PROTEZIONE:

(1) SOCKET
GERAETESTECKDOSE
PRISE DE COURANT
PRESA DI CORRENTE

11, 21: SUPPLY; ENERGIEZUFLUSS VOM VORRAT; ALIMENTATION;
ALIMENTAZIONE
22, 23: DELIVERY; ENERGIEABFLUSS IN DIE ARBEITSLEITUNG;
UTILISATION; MANDATA
3: EXHAUST; ANSCHLUSS ATHMOSPHAERE; ECHAPPEMENT; SCARICO
6.1, 6.2, 6.4: ELECTRICAL CONTROL; ELEKTRISCHER STEUERANSCHLUSS;
COMMANDE ELETTRIQUE; COMANDO ELETRICO

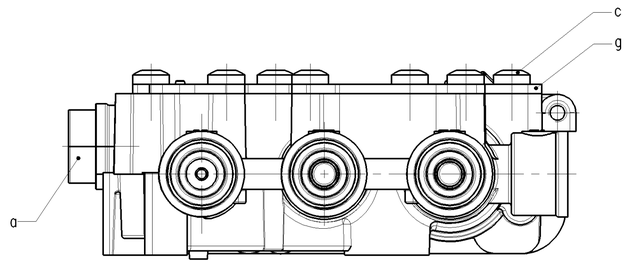


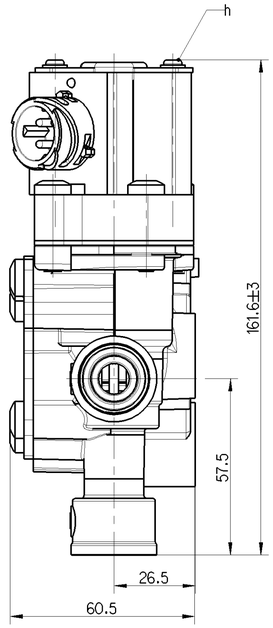


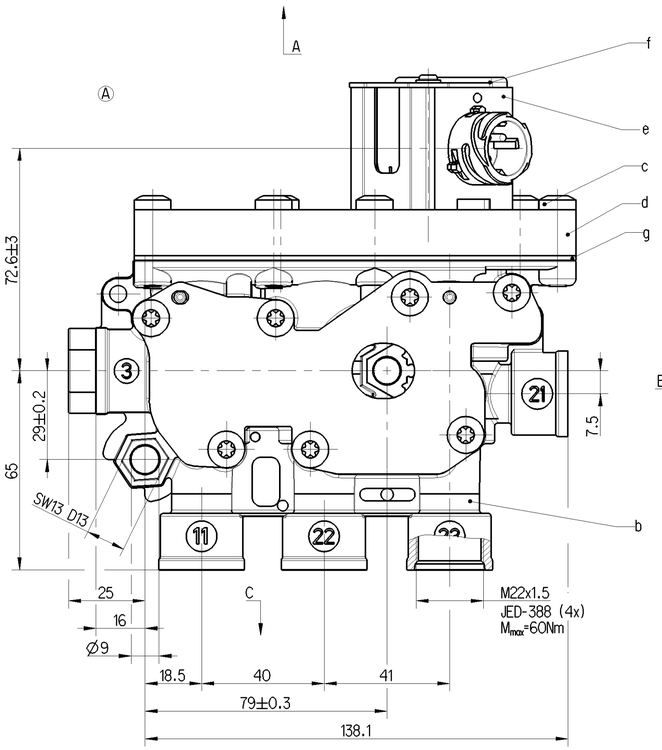


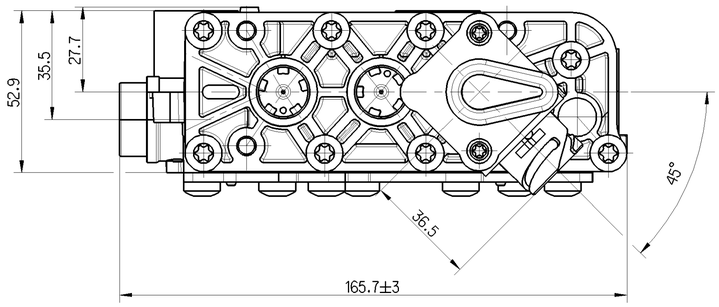


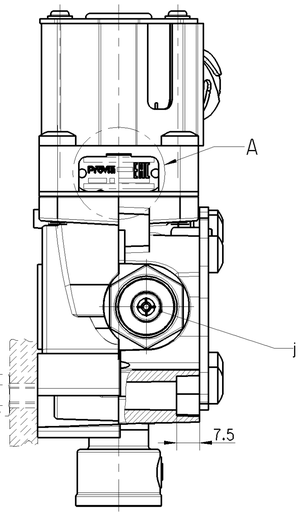


TORQUE
ANZUGSMOMENT max. 23 Nm
COUPLE DE SERRAGE
COPPIA DI SERRAGGIO

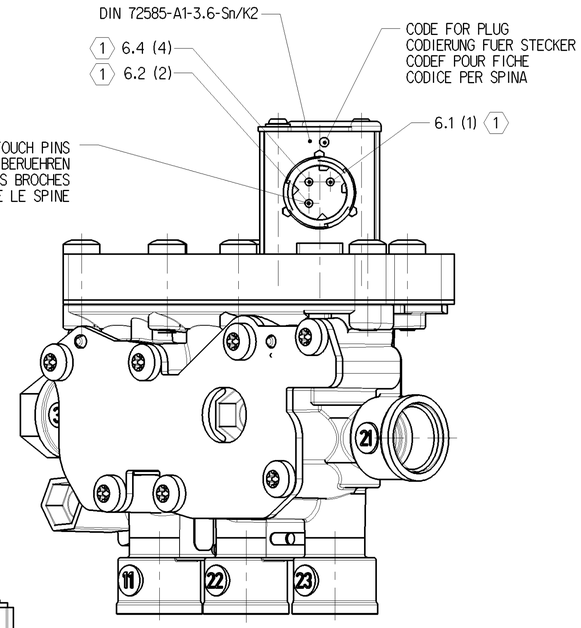


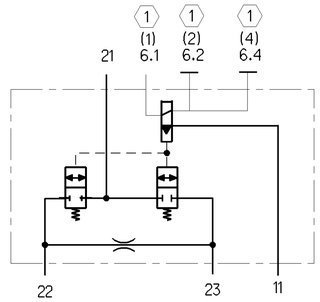


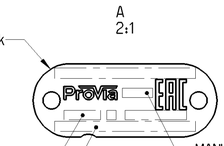


WEEK OF MANUFACTURE /
YEAR OF MANUFACTURE
IDENTIFICATION NUMBER
MANUFACTURING PLANT

| General Specification: JED-334-1 , Size ISO 14405 LP | | | | | |
|---|---|---|---|---|---|
| Further Technical Data: Product Specification | | | | | |
| Doc. Code: 035 | | Sheet: | | To | |
| General Tolerances JED-261 | | | | | |
| Range of Nominal Dimensions ( ± mm) | | | | | |
| Class 1) | ≤ 50 | > 50 ≤ 180 | > 180 ≤ 400 | > 400 | |
| Fine | 0.5 | 1.0 | 1.5 | 2.0 | |
| Medium | 1.0 | 2.0 | 3.0 | 4.0 | ±3° |
| Coarse | 2.0 | 3.5 | 5.0 | 6.5 | |
| Tapped Holes acc. | | | | | |
| 1) Tolerance Class Applied Crossmarked | | | | | |

Copyright WABCO®

| Date | Signature |
|---|---|
| Drawn | |
| 2018-08-24 | Cebula |
| Checked | |
| 2018-08-24 | Pawlowski |
| Expert | |
| Pawlowski | |

ProVia

SOLENOID VALVE
MAGNETVENTIL
ELECTRO-VALVE
ELETTROVALVOLA

| Mass | Scale | Material No. | Date of first issue: 2018-03-16 | | |
|---|---|---|---|---|---|
| 2.0 KG | 1:1 (2:1) | PRO 412 005 0 | Doc.-Code 005 | Language ML | Sheet 1/1 |
| Size A 1 | CAD System CREO | ECN-No. 178142 / Revision 1x A / Techn. Resp. 6670_AM | Replacement for | | |

100mm

Tout Communication ou reproduction de ce document, toute exploitation ou communication de son contenu sont interdites, sauf autorisation écrite. Tous droits de propriété intellectuelle réservés, notamment en matière de brevets et de modèles.
Weitergabe sowie Vervielfältigung dieser Unterlage, Verwertung und Mitteilung ihres Inhalts nicht gestattet, soweit nicht ausdrücklich zugestanden. Zuwiderhandlungen verpflichten zu Schadensersatz. Alle Rechte für den Fall der Patenterteilung oder Eintragung eines Gebrauchsmusters vorbehalten.
Non è permesso consegnare o fare o riprodurre questo documento, né utilizzare il contenuto o renderlo comunque noto a terzi senza autorizzazione scritta. Tutti i diritti di proprietà intellettuale riservati, in particolare i diritti derivanti da brevetti o modelli.
Copying of this document and giving it to others and the use or communication of the contents thereof, are forbidden without express authority. Offenders are liable to the payment of damages. All rights are reserved in the event of the grant of patent or registration of a utility model or design. This document is the subject of copyright.