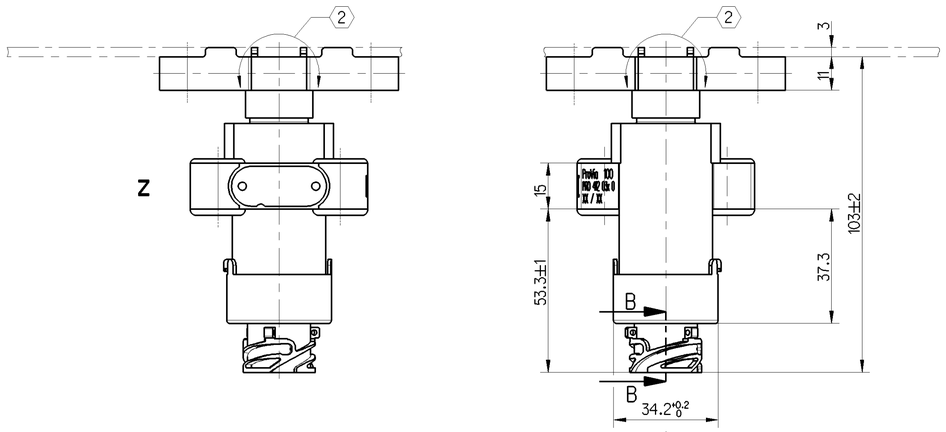

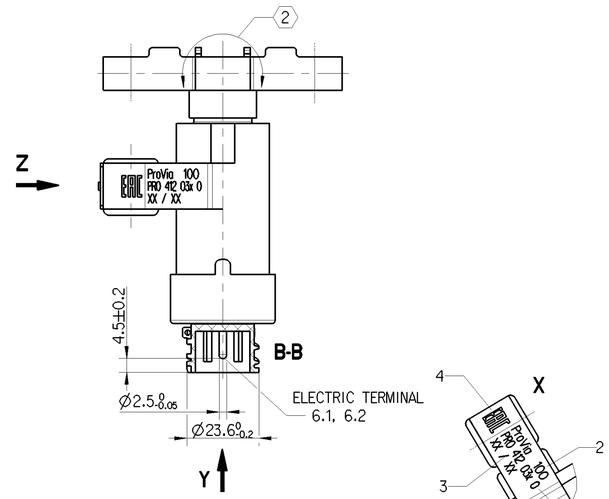

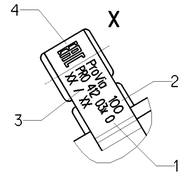

MEASURING PRINCIPLE:	INDUCTIVE
SUPPLY VOLTAGE:	PULSE 8 ... 16 V DC
CURRENT CONSUMPTION:	MAX. 90 mA
THERMAL RANGE OF APPLICATION UNDER NORMAL AMBIENT CONDITIONS:	-40°C ... +80°C
SHORT TIME HEAT RESISTANCE:	110°C FOR MAX. 1 h
AMBIENT MEDIUM:	AIR (WATER-, OIL AND DUST CONTAINING)

DISTANCE SENSOR WITHOUT TEMPERATURE COMPENSATION

CABLE BETWEEN SENSOR AND ELECTRONIC CONTROL UNIT (ECU)
LENGTH: MAX. 15 m WIRE CROSS SECTION: ≥1 mm²

TYPE OF PROTECTION ACC. TO ISO 20653
(COMPLETE DEVICE WITH INSTALLED PLUG): IP 6K9K

DISTANCE SENSOR CAN ONLY BE OPERATED IN CONNECTION WITH AN APPROPRIATE ADAPTION CIRCUIT

1) PROVIA DEVICE NUMBER
2) MANUFACTURER NUMBER
3) WEEK OF MANUFACTURE / YEAR OF MANUFACTURE
4) EAC MARK
1)-4) LASER MARKING

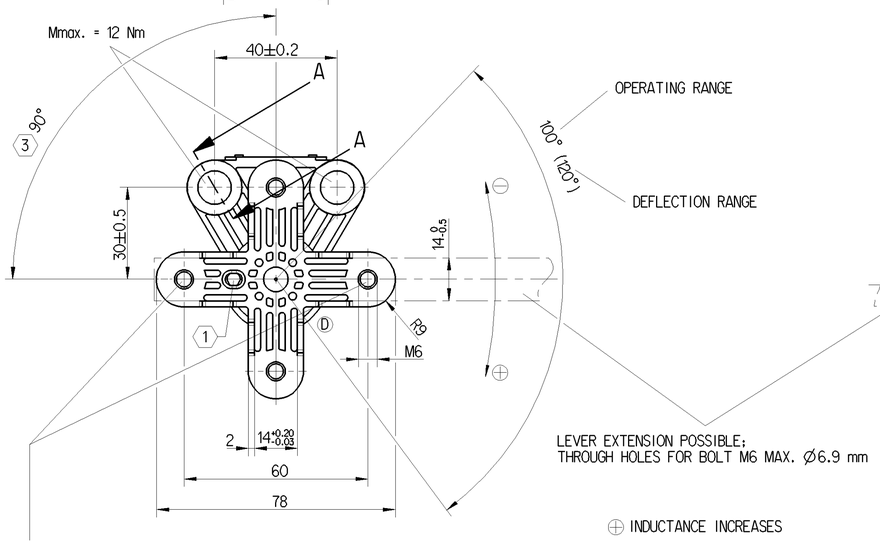

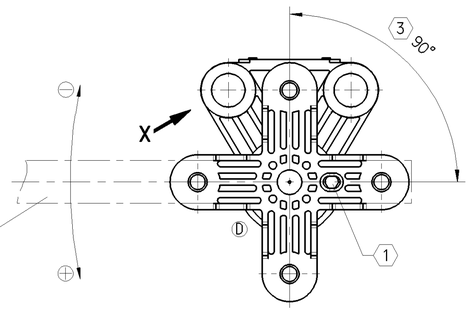

LEVER EXTENSION POSSIBLE:
THROUGH HOLES FOR BOLT M6 MAX. Ø6.9 mm

⊕ INDUCTANCE INCREASES
⊖ INDUCTANCE DECREASES

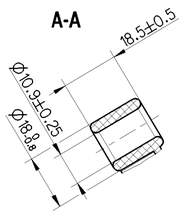

1 FIXING OF THE SENSOR IN CENTRAL POSITION BY MEANS OF MANDREL Ø4h8

2 Mmax.= 2 Nm (FOR 0.25% OF THE VIBRATIONS Mmax.= 8 Nm)

3 RELATIVE POSITION BETWEEN SENSOR FIXING AND FLANGE

4 OPERATING OF SENSOR IS POSSIBLE FROM FOUR SIDES, FOR THIS PURPOSE TURN LEVER

INSTALLATION SPACE

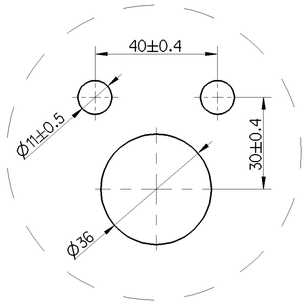

PLUG-IN CONNECTION ISO 15170 - A1-2.1-Sn/K2

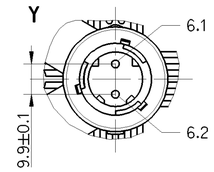

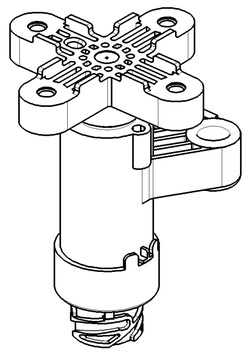

NOMINAL CHARACTERISTIC CURVE FOR: T = 20°C

CHARACTERISTIC CURVE

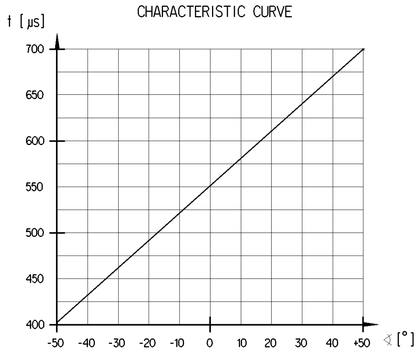

6.1
6.2 ELECTRIC TERMINAL

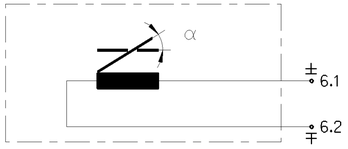

General Specification: JED-334-1 , Size ISO 14405 LP						
Further Technical Data: PRO412030						
Doc. Code: 035			Sheet: 1 To 6			
General Tolerances JED-261						
		Range of Nominal Dimensions (± mm)				
Class 1)		≤ 50	> 50 ≤ 180	> 180 ≤ 400	> 400	∢
Fine		0.5	1.0	1.5	2.0	
Medium	X	1.0	2.0	3.0	4.0	±3°
Coarse		2.0	3.5	5.0	6.5	
Tapped Holes acc. -						
1) Tolerance Class Applied Crossmarked						

Copyright WABCO®

ProVia

DISTANCE SENSOR

Date	Signature	
Drawn	2018-11-23	Kolkowski
Checked	2018-11-23	Marcinkiewicz
Expert	Kolkowski	

Mass	Scale	Material No.	Date of first issue: 2018-02-22		
0.2 KG	1:1	PRO 412 031 0	Doc.Code	Language	Sheet
			005	EN	1/1
Size	CAD System				
A 1	CREO				

EQN-No.	Revision	Techn. Resp.	Replacement for
179377	2 x D	6660_AM	

100mm

Tutte Comunicazioni su riproduzione di questo documento, tutte esploitazione o comunicazione di suo contenuto sono riservate, salvo autorizzazione scritta. Qualsiasi violazione obbliga al risarcimento dei danni. Tutti diritti di proprietà industriale riservati, notamente in materia di brevetti o di modelli.

Non è permesso consegnare a terzi o riprodurre questo documento, né utilizzare il contenuto o renderlo comunque noto a terzi senza autorizzazione scritta. Qualsiasi violazione obbliga al risarcimento dei danni. Tutti diritti di proprietà industriale riservati, in particolare quelli di brevetto o modello.

Weitergabe sowie Vervielfältigung dieser Unterlage, Verwertung und Mitteilung ihres Inhalts nicht gestattet, soweit nicht ausdrücklich zugestanden. Zuwiderhandlungen verpflichten zu Schadensersatz. Alle Rechte für den Fall der Patent- oder Gebrauchsmustererteilung vorbehalten.

Copying of this document and giving it to others and the use or communication of the contents thereof, are forbidden without express authority. Offenders are liable to the payment of damages. All rights are reserved in the event of the grant of patent or registration of a utility model or design. This document is the subject of copyright.