	MATERIAL	SURFACE PROTECTION
I	POM	
II	EPDM	
III	STEEL	Zn
IV	STEEL	Zn
V	COMPOSITE PLASTIC	
VI	STEEL	Zn
VII	STEEL	Zn
VIII	EPDM	
IX	PA 6.6 30GF	

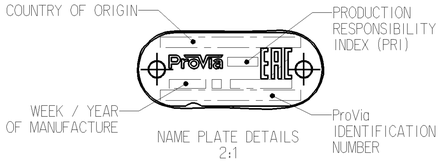

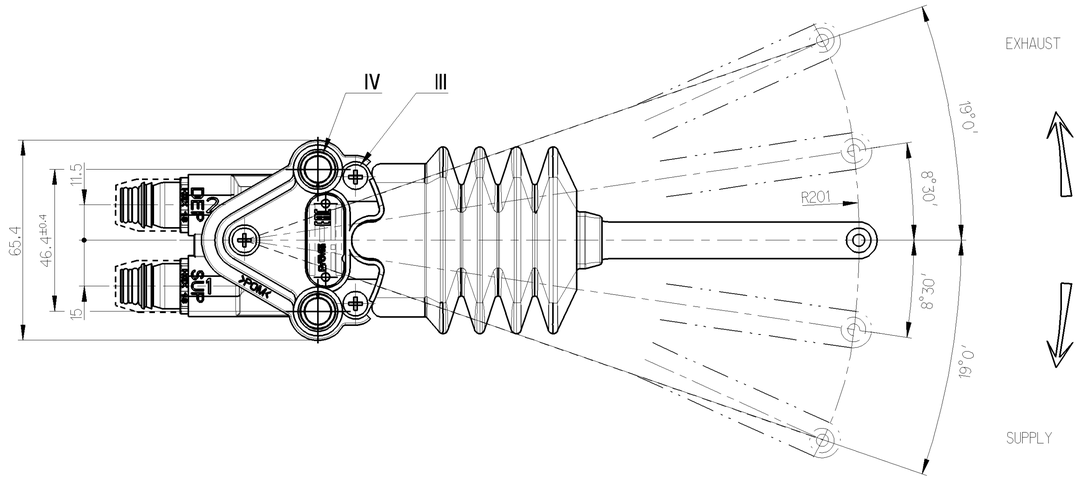

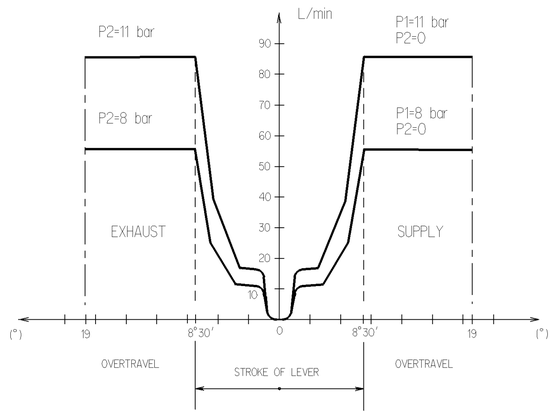

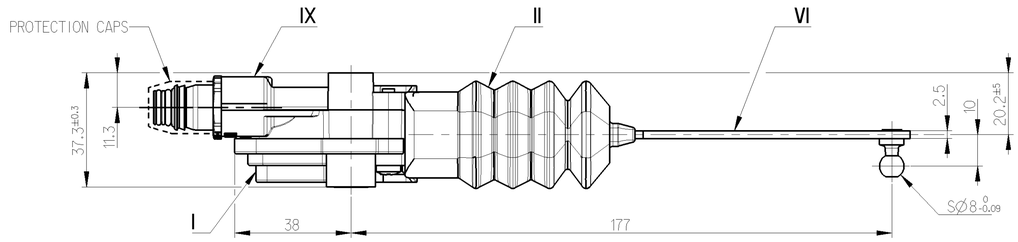

1	SUPPLY
2	DELIVERY
THERMAL RANGE	-45°C ... +100°C
WORKING PRESSURE	P1= 13 bar MAX.
EXCEPTIONAL INLET PRESSURE	P1= 14 bar MAX.
RESIDUAL PRESSURE	P2= 0.6±0.3 bar

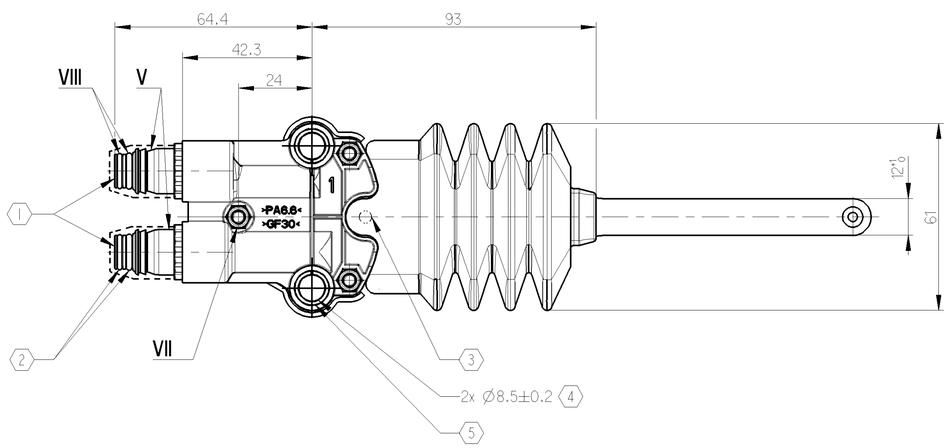

1. RAUFOSS ABC SMALL CARTRIDGE FOR PLASTIC TUBE EXTERNAL DIAMETER Ø6±0.1
2. GREASED WITH SILICONE OIL
3. HOLE Ø4 TO PRE-INDEX IN MECHANICAL NEUTRAL POSITION
4. FIXING OF THE VALVE BY SCREW: M8 TORQUE: 28Nm MAX.
5. FOR INFORMATION: BUSH EXTERNAL DIAMETER (Ø11.5±0.5)

SYMBOL

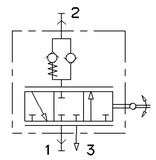

General Specification: JED-334-1 , Size ISO 14405 LP					
Further Technical Data: PRO 417 025 0					
Doc. Code: 035		Sheet: 1 To 5			
General Tolerances JED-261					
Class 1)	Range of Nominal Dimensions (± mm) ≤ 50	> 50 ≤ 180	> 180 ≤ 400	> 400	∢
Fine	0.5	1.0	1.5	2.0	
Medium	1.0	2.0	3.0	4.0	±3°
Coarse	2.0	3.5	5.0	6.5	
Tapped Holes acc.					
1) Tolerance Class Applied Crossmarked					

Copyright WABCO®

Date	Signature
Drawn 2020-06-03	Sriram J
Checked 2020-06-10	Yerchachelvan
Expert	Thomas Bilsing

ProVia

LEVELING VALVE

Mass	Scale	Material No.	Date of first issue: 2020-06-10		
0.228 KG	1:1 2:1	PRO 417 025 0	Doc.Code 005	Language EN	Sheet 1/1
Size A 1	CAD System CREO	ECN-No. -	Revision -	Techn. Resp. 5642_AM	Replacement for -

100mm

Tout Communication ou reproduction de ce document, toute exploitation ou communication de son contenu, sont interdites, sauf autorisation. Tous droits de propriété industrielle réservés, notamment en matière de brevets et de modèles.
Weitergabe sowie Vervielfältigung dieser Unterlage, Verwertung und Mitteilung ihres Inhalts nicht gestattet, soweit nicht ausdrücklich zugestanden. Zuwiderhandlungen verpflichten zu Schadenersatz. Alle Rechte für den Fall der Patent-, Gebrauchsmuster- oder Geschmacksmustereintragung vorbehalten.
Non è permesso consegnare o farci o riprodurre questo documento, né utilizzare il contenuto o renderlo comunque noto a terzi senza autorizzazione. Tutti i diritti di proprietà industriale sono riservati, in particolare quelli di brevetto, marchio e modello.
Copyright of this document and giving it to others and the use or communication of the contents thereof, are forbidden without express authority. Offenders are liable to the payment of damages. All rights are reserved in the event of the grant of patent or registration of a utility model or design. The document is the subject of copyright.