SURFACE PROTECTION	
I	ZINC PLATED WITH CR6+ FREE
II	ELECTRO-PAINTING
III	DACROMET
IV	HARD POLYETHYLENE
V	RUBBER
VI	STICKER

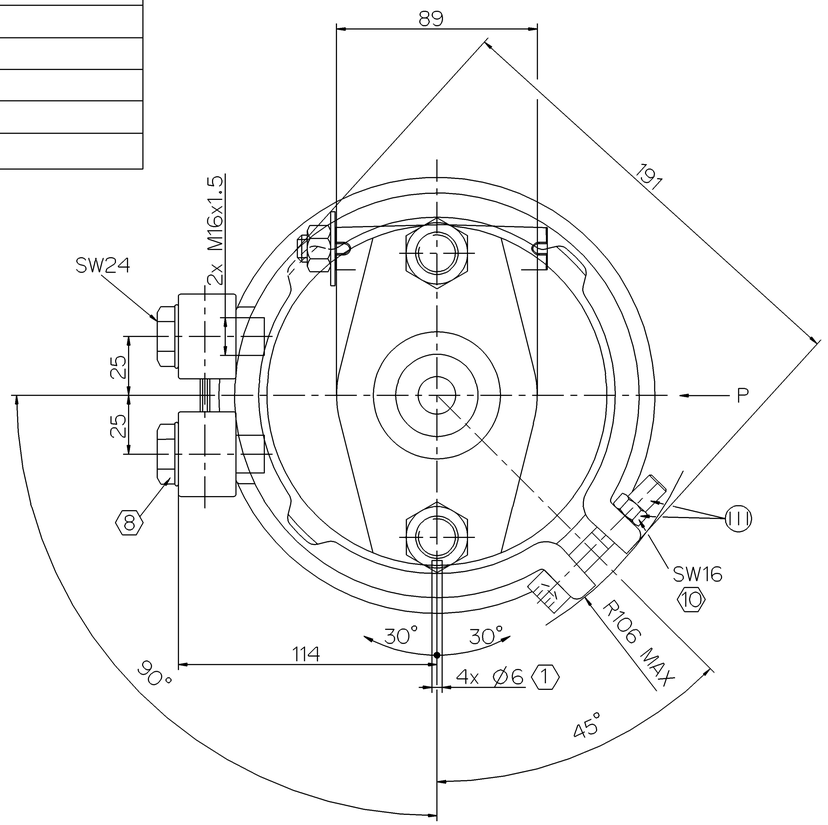

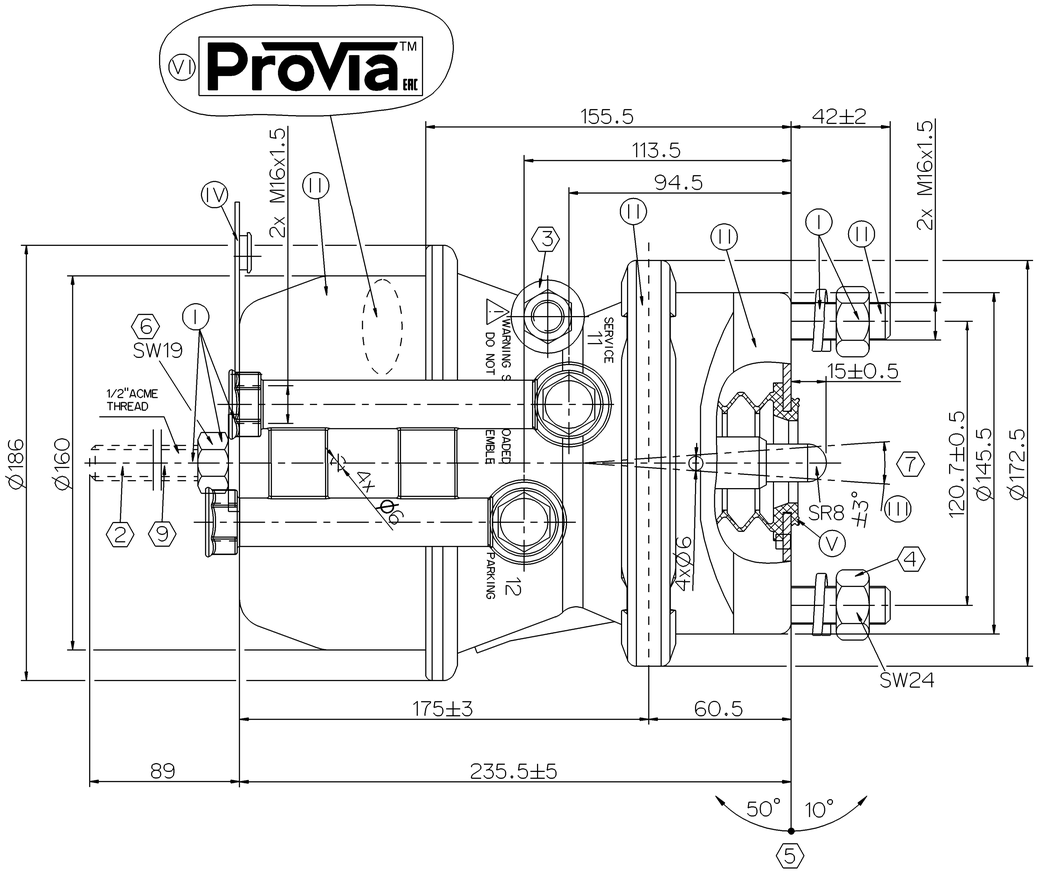

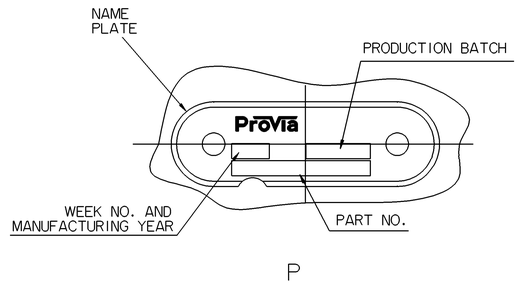

FORCE:N

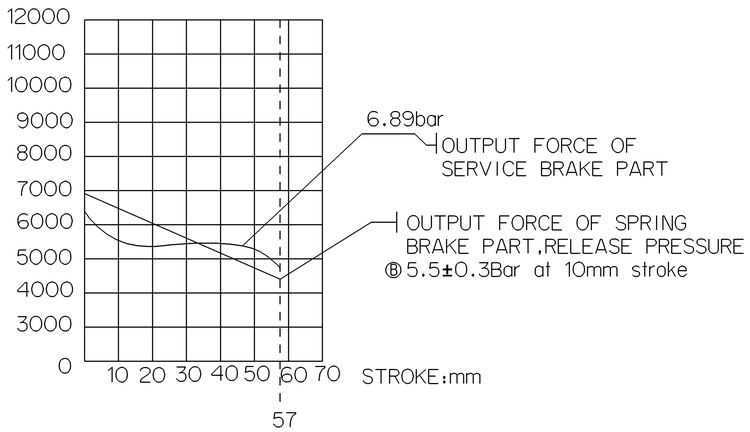

FORCE:N

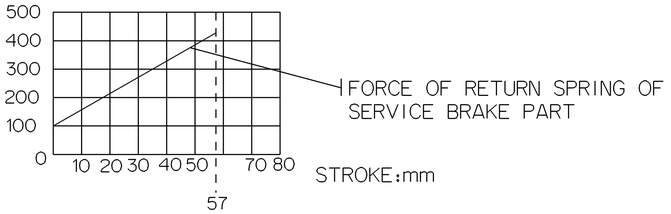

GRAPHS FOR INFORMATION ONLY

1. OPEN BREATHER HOLE
2. CONDITION AS SUPPLIED : SPRING BRAKE APPLIED
3. FIXTURE OF RELEASE BOLT TORQUE: 22.5±2.5 Nm
4. TORQUE: 220±20 Nm
5. ADMISSIBLE INSTALLATION POSITION
6. TORQUE:MAX.25Nm
7. DEFLECTION: 6° MAX AT STROKE:0 mm
8. TORQUE: 34Nm MAX.
9. RELEASED POSITION
10. TORQUE: ≥25Nm

TECHNICAL REQUIREMENT
1.STROKE:
PARKING CHAMBER: ≥57mm
SERVICE CHAMBER: ≥57mm;
2.WORKING PRESSURE:
SERVICE CHAMBER: Pmax 10.5 bar, TEMPORARILY 13 bar MAX;
PARKING CHAMBER: Pmax 8.5 bar, TEMPORARILY 10 bar MAX
3.WORKING TEMPERATURE:-40°C..+80°C
4.THE DRAWING IS AT CAGED CONDITION,THE PARKING CHAMBER WILL BE AT UNCAGED CONDITION DURING SHIPMENT

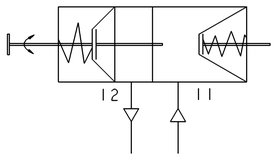

CIRCUIT DIAGRAM

General Specification: JED-3341-1 , Size ISO 14405 LP					
Further Technical Data: PRO 712 712 0					
Doc. Code: 043				Sheet: 01 To 07	
General Tolerances JED-261					
Class 11	Range of Nominal Dimensions (± mm)				
	≥ 50	> 50 ≥ 180	> 180 ≥ 400	> 400	
Fine	0.5	1.0	1.5	2.0	
Medium	1.0	2.0	3.0	4.0	±3°
Coarse	2.0	3.5	5.0	6.5	
Tapped Holes: acc. -					
11 Tolerance Class Applied Crosmarked					

Copyright WABCO®

Date	Signature
Drawn 2019-08-19	Shanmugam S
Checked 2019-08-19	Yerahachelvan
Expert Thomas Bitsing	

ProVia

DOUBLE DIAPHRAGM SPRING BRAKE ACTUATOR 16/24

Mass	Scale	Material No.	Date of first issue: 2019-05-06
7.2 kg	NTS	PRO 712 715 0	Doc.Code: 005 / Language: EN / Sheet: 1/1
Size A 0	CAD System CREO	EDV-No. 502293 / Revision 1 B / Techn. Resp. 5421_AM	Replacement for -

100mm

Tale Corporation is a registered trademark of WABCO Europe BVBA. Tale corporation is an owner and licensee, not a participant, agent, or representative of the WABCO Group. Tale corporation makes no warranty or representation as to the correctness or completeness of its content herein, as to the suitability of its content for any particular purpose, or as to the non-infringement of any third party intellectual property rights. Tale corporation disclaims any liability for any direct or indirect damages or losses suffered by third parties in reliance on the content of this document. Tale corporation retains the right to make changes to this document at any time, without notice. Tale corporation assumes no obligation to update this document. Tale corporation makes no warranty or representation as to the correctness or completeness of its content herein, as to the suitability of its content for any particular purpose, or as to the non-infringement of any third party intellectual property rights. Tale corporation disclaims any liability for any direct or indirect damages or losses suffered by third parties in reliance on the content of this document. Tale corporation retains the right to make changes to this document at any time, without notice. Tale corporation assumes no obligation to update this document. Tale corporation makes no warranty or representation as to the correctness or completeness of its content herein, as to the suitability of its content for any particular purpose, or as to the non-infringement of any third party intellectual property rights. Tale corporation disclaims any liability for any direct or indirect damages or losses suffered by third parties in reliance on the content of this document. Tale corporation retains the right to make changes to this document at any time, without notice. Tale corporation assumes no obligation to update this document.