VII	STICKER
VI	COPPER
V	RUBBER
IV	ZINC PLATED WITH CR6+ FREE
III	PLASTIC
II	STEEL SURFACE QPQ
I	SURFACE OXIDATION
PART CODE	SURFACE PROTECTION

<1> SAFETY CHARACTERISTICS	0
<2> SIGNIFICANT CHARACTERISTICS	0
<CI> CUSTOMER INTERFACE	9

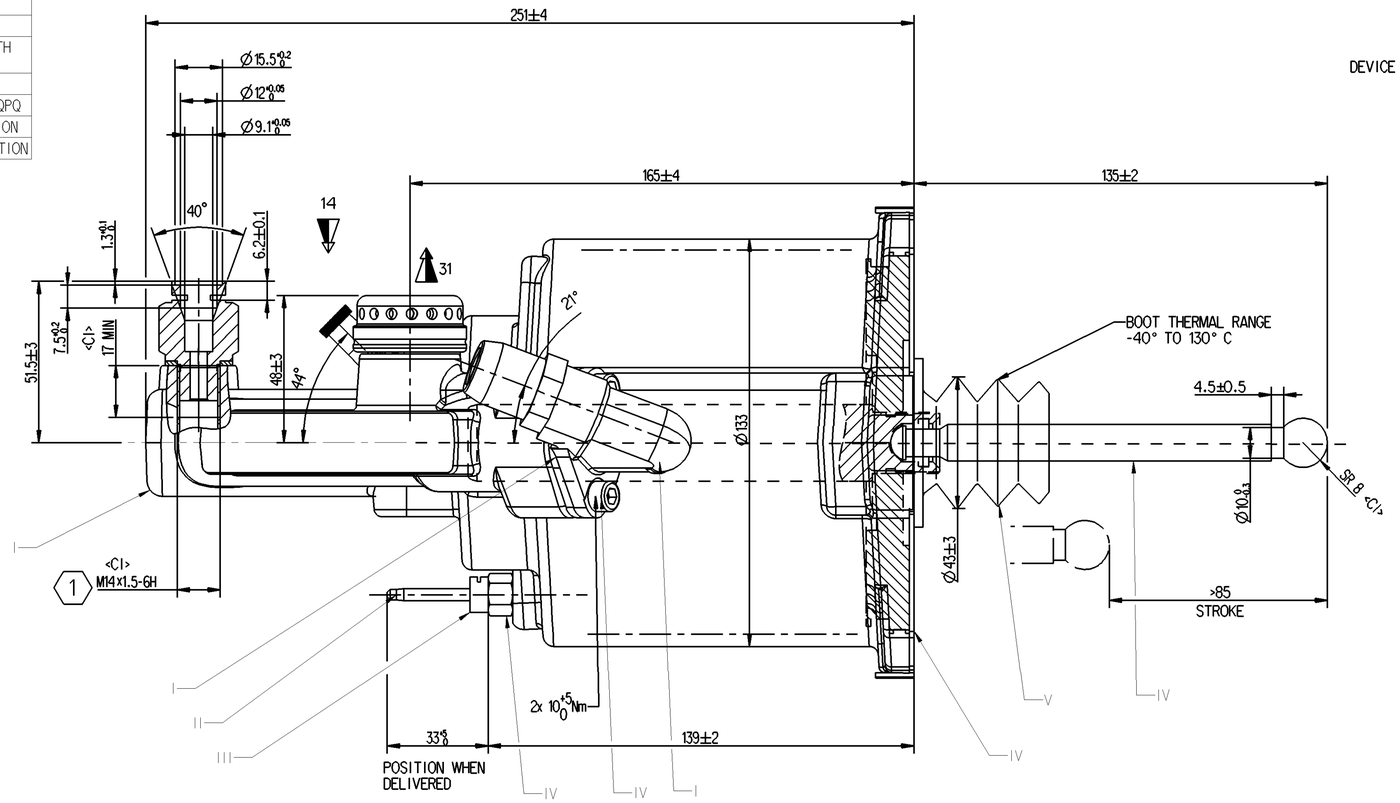

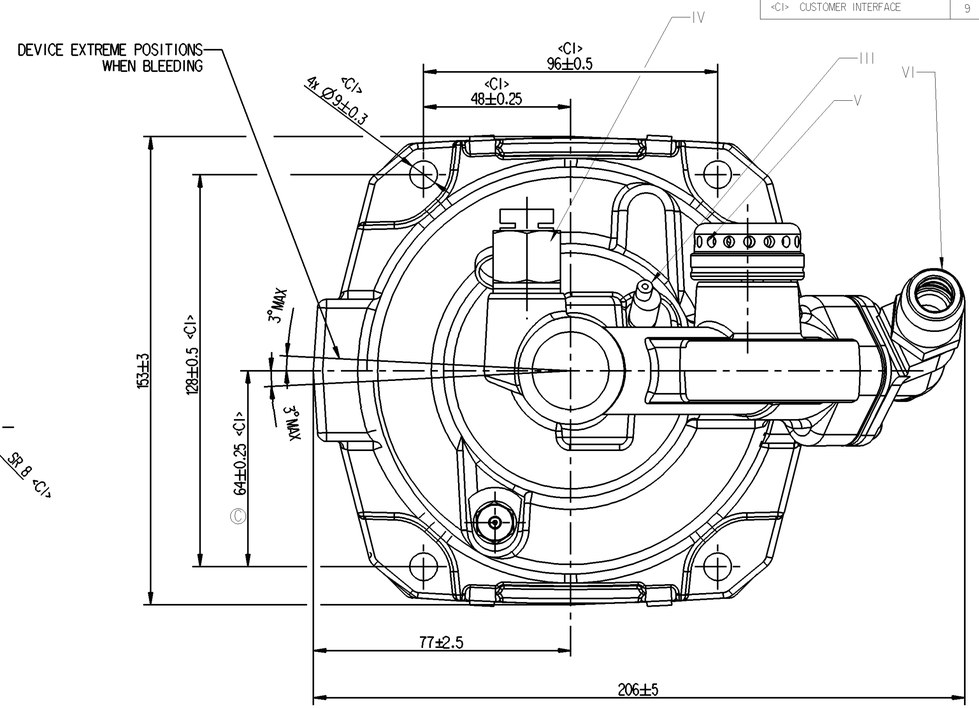

NOTE:
1.HYDRAULIC TANK DIA: Ø25mm;
2.AIR TANK DIA: Ø125mm;
3.HYDRAULIC TANK PRESSURE: 4MPa;
4.HYDRAULIC WORKING PRESSURE MAX: 12MPa;
5.AIR WORKING PRESSURE MAX: 1MPa ;
6.WORKING TEMPERATURE: -30° TO +80°C;
7.WORKING STROKE: >85mm;
8.MEDIUM: BRAKE OIL, AIR

1 TORQUE 25Nm MAX

2 TORQUE 34Nm MAX

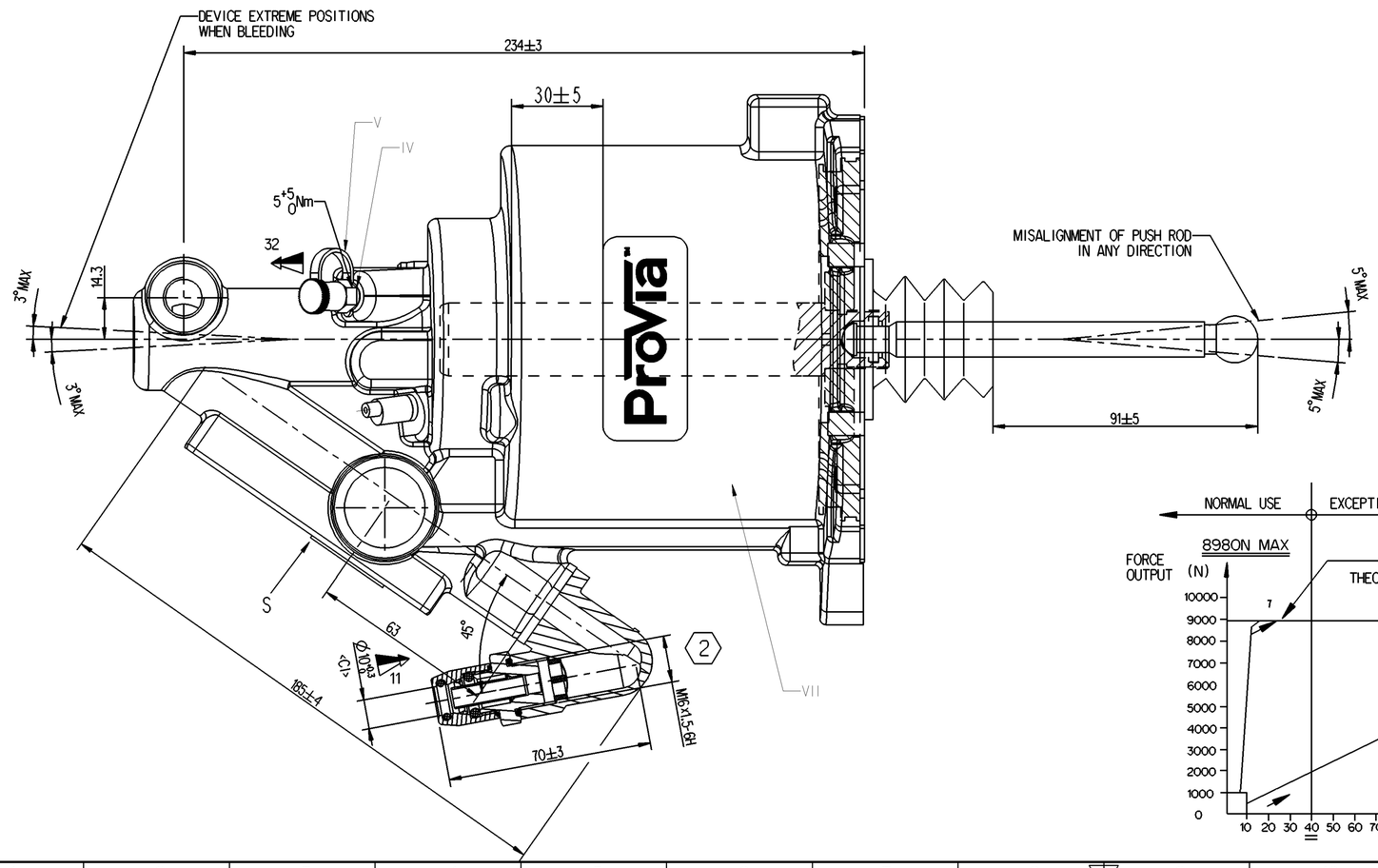

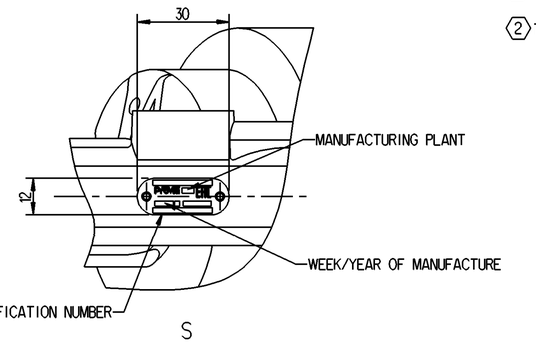

SCHEMATIC DIAGRAM

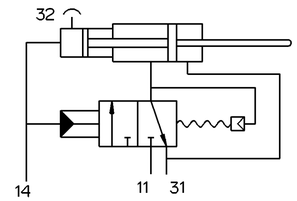

MARKING OF PORTS
11-AIR INLET
14-OIL INLET
31-AIR EXHAUST
32-BLEED SCREW

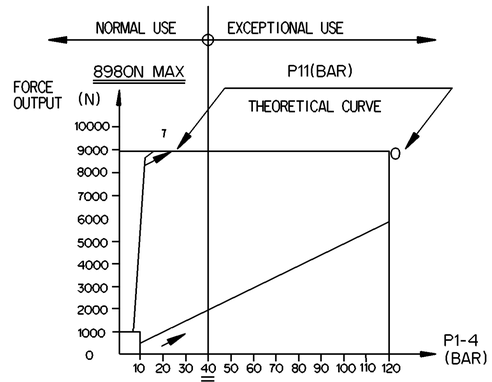

General Specification: JED-334-1 , Size ISO 14405 LP						
Further Technical Data: PRO 411 031 0						
Doc. Code: 035		Sheet: 1 To 5				
General Tolerances JED-261						
		Range of Nominal Dimensions (± mm)				
Class 1)		≤ 50	> 50 ≤ 180	> 180 ≤ 400	> 400	
Fine		0.5	1.0	1.5	2.0	±3°
Medium	X	1.0	2.0	3.0	4.0	
Coarse		2.0	3.5	5.0	6.5	
Tapped Holes acc. -						
1) Tolerance Class Applied Crossmarked						

Copyright WABCO®

Date	Signature
Drawn 2021-07-22	M.P.
Checked 2021-07-26	Yerahochelvan
Expert Thomas Bilsing	

ProVia

CLUTCH SERVO

Mass	Scale	Material No.	Date of first issue: 2020-01-13
3.38 KG	NTS	PRO 411 031 0	Doc.Code 005 / Language EN / Sheet 1/1
Size A 1	CAD System CREO	ECN-No. 508847 / Revision 1x C / Techn. Resp. 5630_AM	Replacement for -

100mm

Toute Communication ou reproduction de ce document, toute exploitation ou communication de son contenu sont interdites, sauf autorisation écrite. Tous droits de propriété intellectuelle réservés, notamment en matière de brevets et de modèles.

Weitergabe sowie Vervielfältigung dieser Unterlage, Verwertung und Mitteilung ihres Inhalts nicht gestattet, soweit nicht ausdrücklich bewilligt. Alle Rechte für den Fall der Patent- oder Gebrauchsmustereintragung vorbehalten.

Non è permesso consegnare o farci a chiunque questo documento, né utilizzare il contenuto o renderlo comunque noto o terzi senza autorizzazione scritta. Tutti i diritti di proprietà intellettuale sono riservati, in particolare quelli di brevetto e modello.

Copying of this document and giving it to others and the use or communication of the contents thereof, are forbidden without express authority. Offenders are liable to the payment of damages. All rights are reserved in the event of the grant of patent or registration of a utility model or design. This document is the subject of copyright.