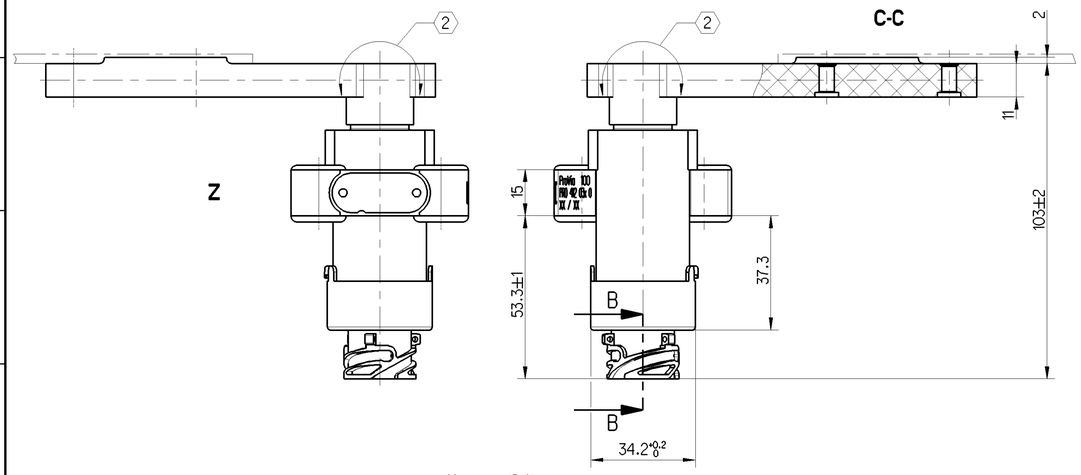

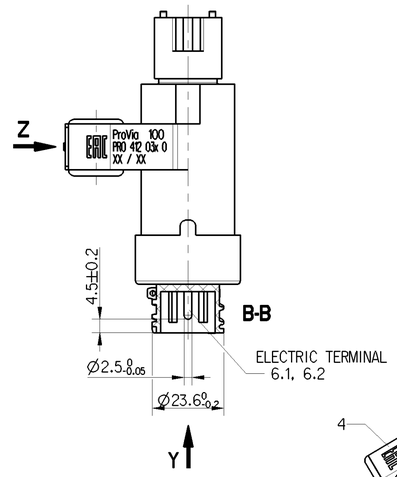

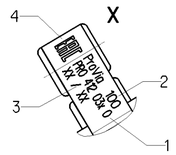

MEASURING PRINCIPLE:	INDUCTIVE
SUPPLY VOLTAGE:	PULSE 8 ... 16 V DC
CURRENT CONSUMPTION:	MAX. 90 mA
THERMAL RANGE OF APPLICATION UNDER NORMAL AMBIENT CONDITIONS:	-40°C ... +80°C
SHORT TIME HEAT RESISTANCE:	110°C FOR MAX. 1 h
AMBIENT MEDIUM:	AIR (WATER-, OIL AND DUST CONTAINING)

DISTANCE SENSOR WITHOUT TEMPERATURE COMPENSATION

CABLE BETWEEN SENSOR AND ELECTRONIC CONTROL UNIT (ECU)
LENGTH: MAX. 15 m WIRE CROSS SECTION: ≥1 mm²

TYPE OF PROTECTION ACC. TO ISO 20653
(COMPLETE DEVICE WITH INSTALLED PLUG): IP 6K9K

DISTANCE SENSOR CAN ONLY BE OPERATED IN CONNECTION WITH AN APPROPRIATE ADAPTION CIRCUIT

1) PROVIA DEVICE NUMBER
2) MANUFACTURER NUMBER
3) WEEK OF MANUFACTURE / YEAR OF MANUFACTURE
4) EAC MARK
1)-4) LASER MARKING

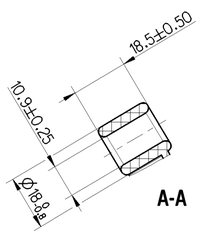

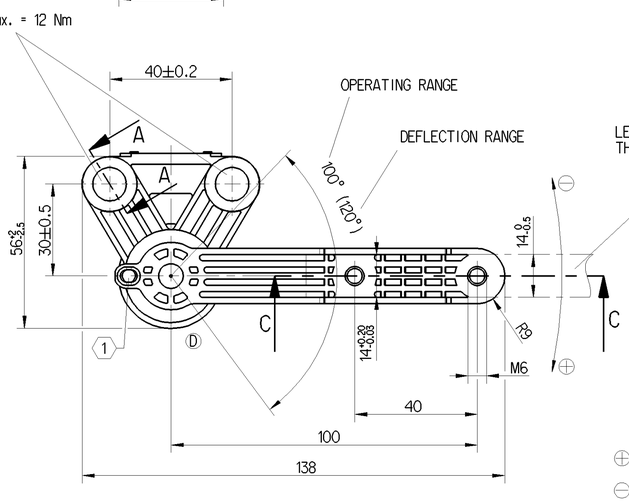

LEVER EXTENSION POSSIBLE:
THROUGH HOLES FOR BOLT M6 MAX. Ø6.9 mm

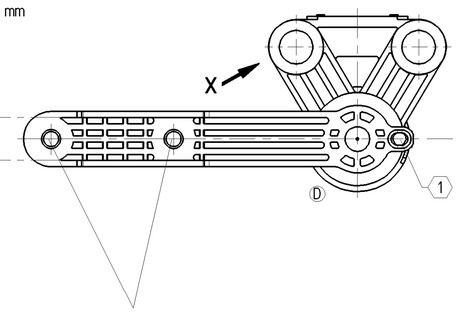

2 FASTENING SCREWS Mmax. = 11 Nm

1 FIXING OF THE SENSOR IN CENTRAL POSITION BY MEANS OF MANDREL Ø4h8

2 Mmax.= 2 Nm (FOR 0.25% OF THE VIBRATIONS Mmax.= 8 Nm)

3 OPERATING OF SENSOR IS POSSIBLE FROM TWO SIDES, FOR THIS PURPOSE TURN LEVER

⊕ INDUCTANCE INCREASES
⊖ INDUCTANCE DECREASES

INSTALLATION SPACE

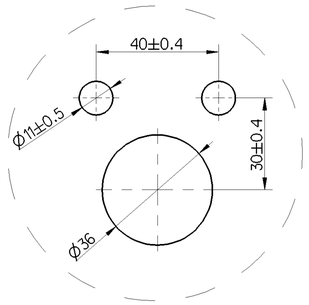

PLUG-IN CONNECTION ISO 15170 - A1-2.1-Sn/K2

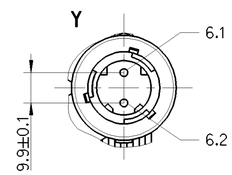

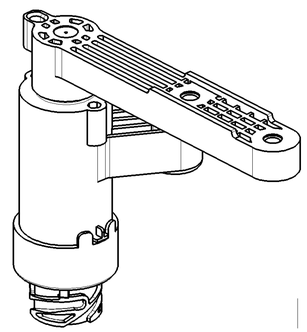

NOMINAL CHARACTERISTIC CURVE FOR: T = 20°C

CHARACTERISTIC CURVE

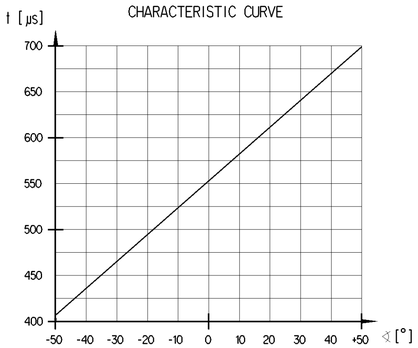

6.1
6.2 ELECTRIC TERMINAL

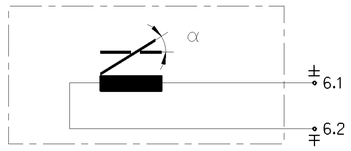

General Specification: JED-334-1 , Size ISO 14405 LP					
Further Technical Data: PR0412030					
Doc. Code: 035			Sheet: 1 To 6		
General Tolerances JED-261					
Range of Nominal Dimensions (± mm)					
Class 1)		≤ 50	> 50 ≤ 180	> 180 ≤ 400	> 400	∢
Fine		0.5	1.0	1.5	2.0	
Medium	X	1.0	2.0	3.0	4.0	±3°
Coarse		2.0	3.5	5.0	6.5	
Tapped Holes acc. -						
1) Tolerance Class Applied Crossmarked						

Copyright WABCO®

ProVia

DISTANCE SENSOR

Date	Signature	
Drawn	2018-11-23	Kolkowski
Checked	2018-11-23	Marcinkiewicz
Expert	Kolkowski	

Mass 0.2 KG	Scale 1:1	Material No. PRO 412 030 0	Date of first issue: 2018-02-22	
			Doc.Code 005	Language EN	Sheet 1/1
Size A 1	CAD System CREO	EDN-No. 179377	Revision 2 x D	Techn. Resp. 6660_AM	Replacement for

100mm

Tutti i diritti riservati. Non è permesso consegnare a terzi o riprodurre questo documento, né utilizzare il contenuto o renderlo comunque noto a terzi senza esplicita autorizzazione. Tutti i diritti derivanti da brevetti o modelli di utilità riservati.

Copying of this document and giving it to others and the use or communication of the contents thereof, are forbidden without express authority. Offenders are liable to the payment of damages. All rights are reserved in the event of the grant of patent or registration of a utility model or design. This document is the subject of copyright.

Toute Communication ou reproduction de ce document, toute exploitation ou communication de son contenu sont interdites, sauf autorisation. Tous droits de propriété industrielle réservés, notamment en matière de brevets et de modèles.

Weitergabe sowie Vervielfältigung dieser Unterlage, Verwertung und Mitteilung ihres Inhalts nicht gestattet, soweit nicht ausdrücklich zugesichert. Zuwiderhandlungen verpflichten zu Schadensersatz. Alle Rechte für den Fall der Patent- oder Gebrauchsmustererteilung vorbehalten.