<1> SAFETY CHARACTERISTICS	0
<2> SIGNIFICANT CHARACTERISTICS	0
<CI> CUSTOMER INTERFACE	2

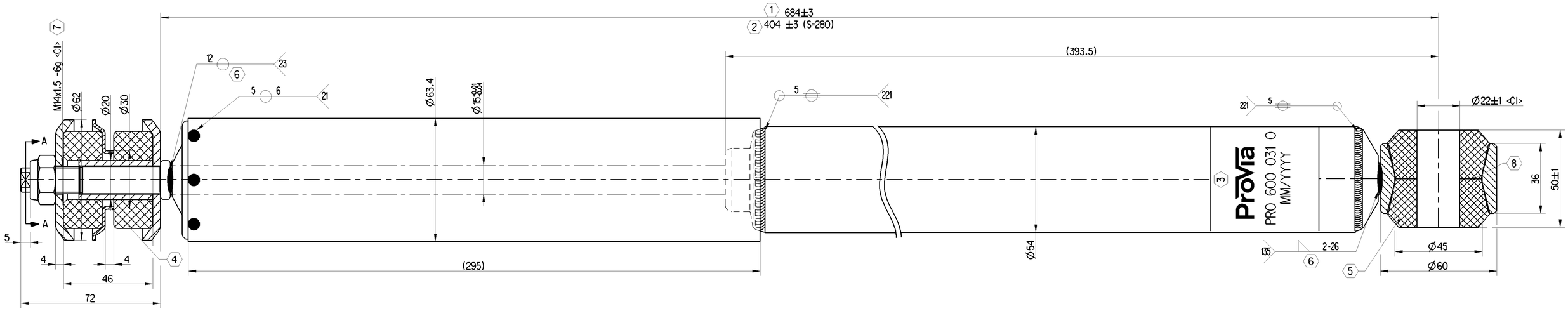

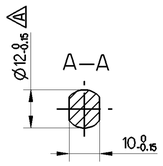

1	MAX.REBOUND LENGTH
2	MIN.COMPRESSION LENGTH
3	MARKING DETAILS PROVIA LOGO PROVIA PART NUMBER DATE OF MANUFACTURING
4	HARDNESS OF RUBBER PARTS 65-70 HS
5	HARDNESS OF RUBBER PARTS 67-73 HS
6	WELD STRENGTH 45 KN
7	TORQUE : 60 TO 65 Nm FOR INSTALLATION A
8	TWO BUSHES USED IN THE ASSEMBLY A
	COLOUR: RAL 9005B SEMI-BLACK

Resistance force table of SAMPLE criterion - HYDRAULIC

V (m/s)	0.052	0.131	0.262	0.393	0.524
Rebound (N)	868	1668/2782	2756	3203	3102/4198
Compression (N)	103	113/213	257	350	382/518
S (mm)	100				

General Specification: ISO 8015, JED-334-1, Size ISO 14405 LP
Further Technical Data: PRO 600 018 0
Doc. Code: 035 Sheet: 1 To 7

General Tolerances JED-261

Class 1)	Range of Nominal Dimensions (± mm) ≤ 50	> 50 ≤ 180	> 180 ≤ 400	> 400	∢
Fine	±0.5	±1	±1.5	±2	
Medium X	±1	±2	±3	±4	±3°
Coarse	±2	±3.5	±5	±6.5	

Topped Holes acc. -
1) Tolerance Class Applied Crossmarked

Copyright WABCO®

Date	Signature
Drawn 2023-02-14	Saravanan
Checked 2023-02-15	Manivannan

Dimensions in mm

ProVia
SHOCK ABSORBER

Mass	Scale	Material No.	Date of first issue: 2023-01-23		
3.7±1 kg	1:1	PRO 600 031 0	Doc.Code 005	Language EN	Sheet 1/1
Size A 1	CAD System CREO	ECN-No. 513345 / Revision 3x A / Techn. Resp. 6961_AM	Replacement for -		

100mm

Toute Communication ou reproduction de ce document, toute exploitation ou communication de son contenu sont interdites, sauf autorisation expresse. Tous droits de propriété industrielle réservés, notamment en matière de brevets et de modèles.
Weitergabe sowie Vervielfältigung dieser Unterlage, Verwertung und Mitteilung ihres Inhalts nicht gestattet, soweit nicht ausdrücklich zugestanden. Zuwiderhandlungen stehen einer entsprechenden Mitbeschuldigung dar und verpflichten zu Schadenersatz. Alle Rechte für den Fall der Patenterteilung oder Gebrauchsmustereintragung vorbehalten.
Non è permesso consegnare a terzi o riprodurre questo documento, né utilizzare il contenuto o renderlo comunque noto a terzi senza autorizzazione esplicita. Ogni infrazione costituisce un evidente abuso e comporterà il risarcimento dei danni subiti. E' fatta riserva di tutti i diritti derivanti da brevetti o modelli.
Copying of this document and giving it to others and the use or communication of the contents thereof, are forbidden without express authority. Contraventions of this restriction will constitute an evident abuse and result in liability to the payment of damages. All rights are reserved in the event of the grant of patent or registration of a utility model or design. This document is the subject of copyright.