SURFACE PROTECTION	
I	ZINC PLATED WITH CR6+ FREE
II	ELECTRO-PAINTING
III	DACROMET
IV	HARD POLYETHYLENE
V	RUBBER
VI	STICKER

<!> SAFETY CHARACTERISTICS	0
<2> SIGNIFICANT CHARACTERISTICS	0
<CI> CUSTOMER INTERFACE	4

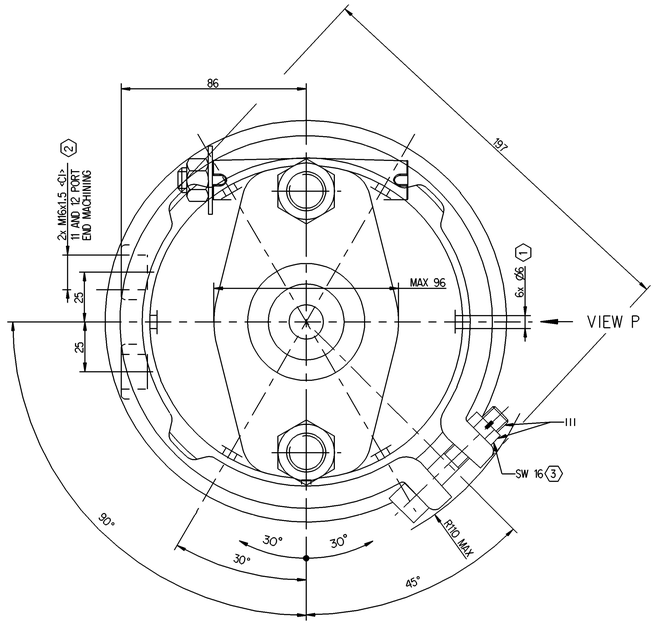

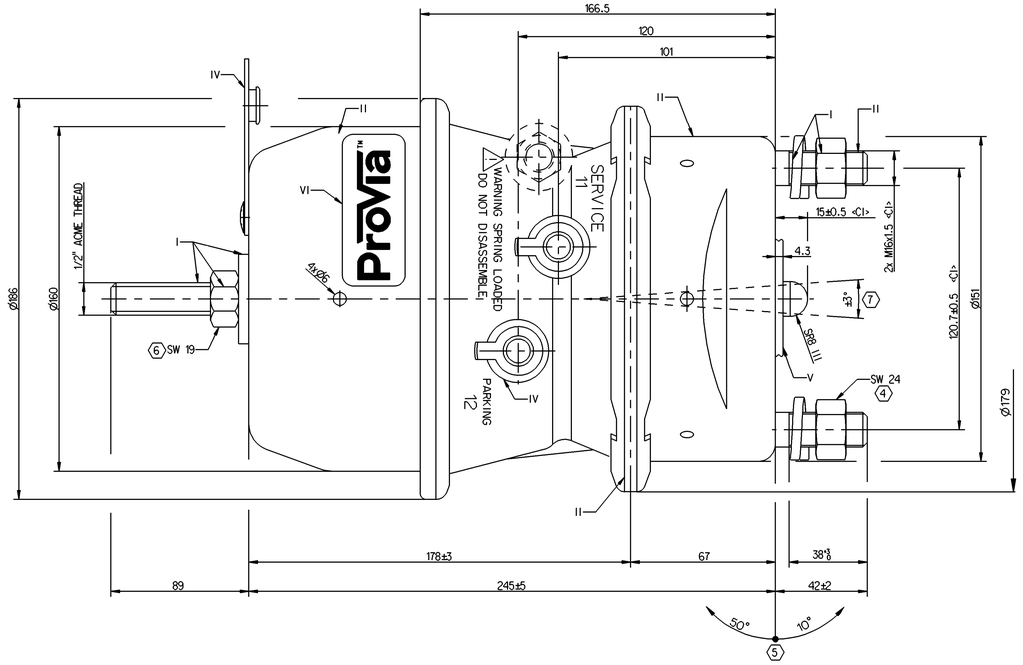

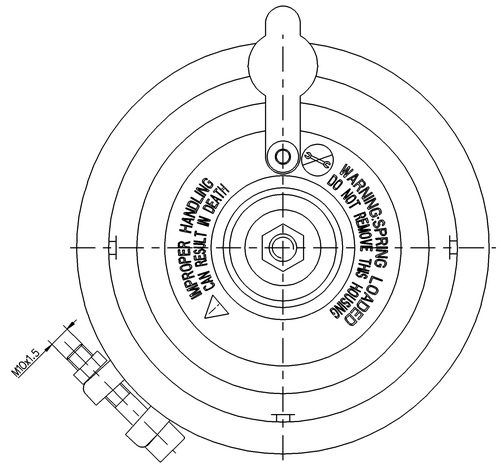

TECHNICAL REQUIREMENT:

1.STROKE:
PARKING CHAMBER:≥ 63.5mm
SERVICE CHAMBER:≥ 63.5mm

2.WORKING PRESSURE :
SERVICE CHAMBER Pmax : 10.5 Bar, TEMPORARILY 13 Bar
PARKING CHAMBER Pmax : 8.5 Bar, TEMPORARILY 10 Bar

3.WORKING TEMPERATURE: -40℃.....+80℃

4.THE DRAWING IS AT CAGED CONDITION,THE PARKING CHAMBER WILL BE AT UNCAGED CONDITION DURING SHIPMENT

5.WORKING MEDIUM: AIR

6.THIS PRODUCT MEETS THE REQUIREMENT OF QC/T 790 STANDARD

1. OPEN BREATHER HOLE
2. TORQUE 34Nm MAX
3. TORQUE: 35-40Nm
4. TORQUE: 220±20 Nm
5. ADMISSIBLE INSTALLATION POSITION
6. TORQUE: MAX.25Nm
7. DEFLECTION: 6° MAX AT STROKE 0mm

GRAPHS FOR INFORMATION ONLY

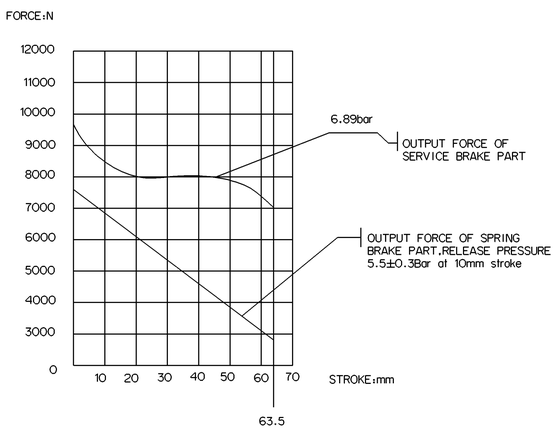

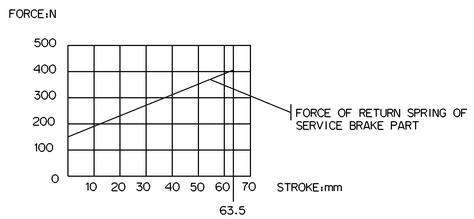

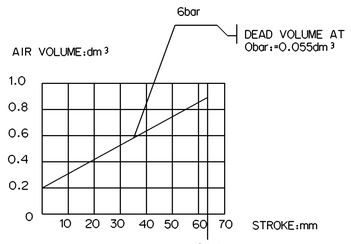

NAME PLATE

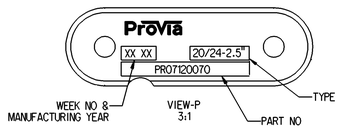

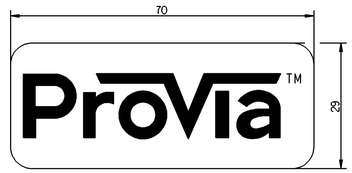

STICKER
2:1

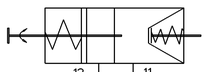

CIRCUIT DIAGRAM

General Specifications: ISO 8015, JED-334-1, Size ISO 14405 LP																	
Further Technical Data: PRO 712 006 0																	
Doc. Code: 035									Sheet: 1 To 14								
General Tolerances JED-261																	
		Range of Nominal Dimensions (in mm)															
Class	11	≤ 50	> 50 ≤ 180	> 180 ≤ 400	> 400												
Fine		±0.5	±1.0	±1.5	±2												
Medium	X	±1	±2	±3	±4	±3°											
Coarse		±2	±3.5	±5	±6.5												
Tapped Holes acc.: -																	
11 Tolerance Class Applied Crossmarked																	

Copyright WABCO®

Date	Signature
Drawn 2023-04-27	Saravanan
Checked 2023-04-28	Manivannan

Dimensions in mm

ProVia

DOUBLE DIAPHGRAM TRISTOP 20/24

Mass	Scale	Material No.	Date of first issue: 2023-04-28		
7.5 kg	1:1 (2:1,3:1)	PRO 712 007 0	Doc.Code	Language	Sheet
			005	EN	1/1
Size A 0	CAD System CREO	EDIntn. -	Revision -	Techn. Resp. 5421_AM	Replacement for -

100mm

Este documento es propiedad de WABCO, todos derechos a su favor quedan reservados, no efectuar ni permitir copiarlo sin el previo consentimiento escrito. Ese documento no debe ser usado para otros fines que los previstos en el contrato, ni puede ser puesto a disposición de terceros, ni publicado en la red. Esto también se aplica a documentos similares. Los infractores serán responsables de los daños. Reservado el derecho de patente, de modelo de utilidad y de diseño. This document is the property of WABCO, all rights are reserved. Not to copy or allow copies to be made or given to third parties, nor to make it available on the internet. This also applies to similar documents. Offenders will be liable for damages. Reserved are the rights of patent, utility model and design.