S.NO	SURFACE PROTECTION
I	ZINC PLATED WITH CR6+ FREE
II	ELECTRO-PAINTING
III	DACROMET
IV	SURFACE OXIDIZATION
V	RUBBER
VI	STICKERS
VII	BLACKENING

<1>	SAFETY CHARACTERISTICS	0
<2>	SIGNIFICANT CHARACTERISTICS	0
<C1>	CUSTOMER INTERFACE	6

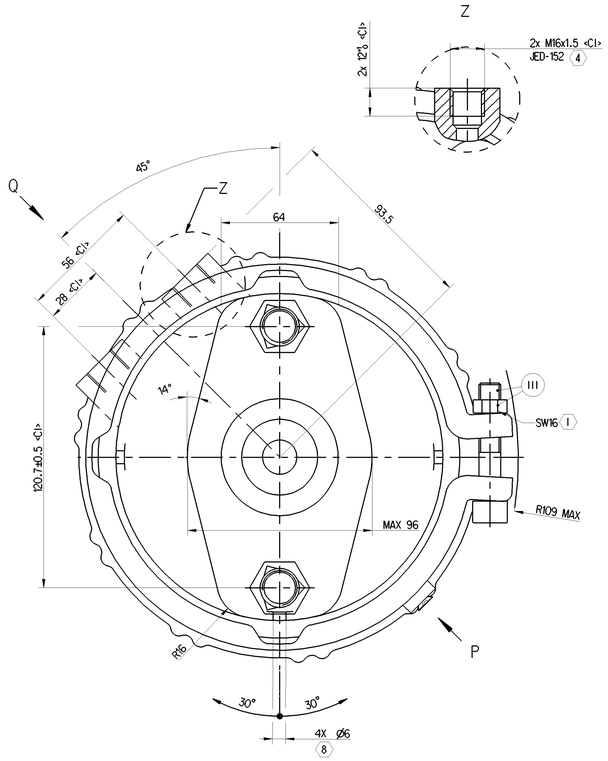

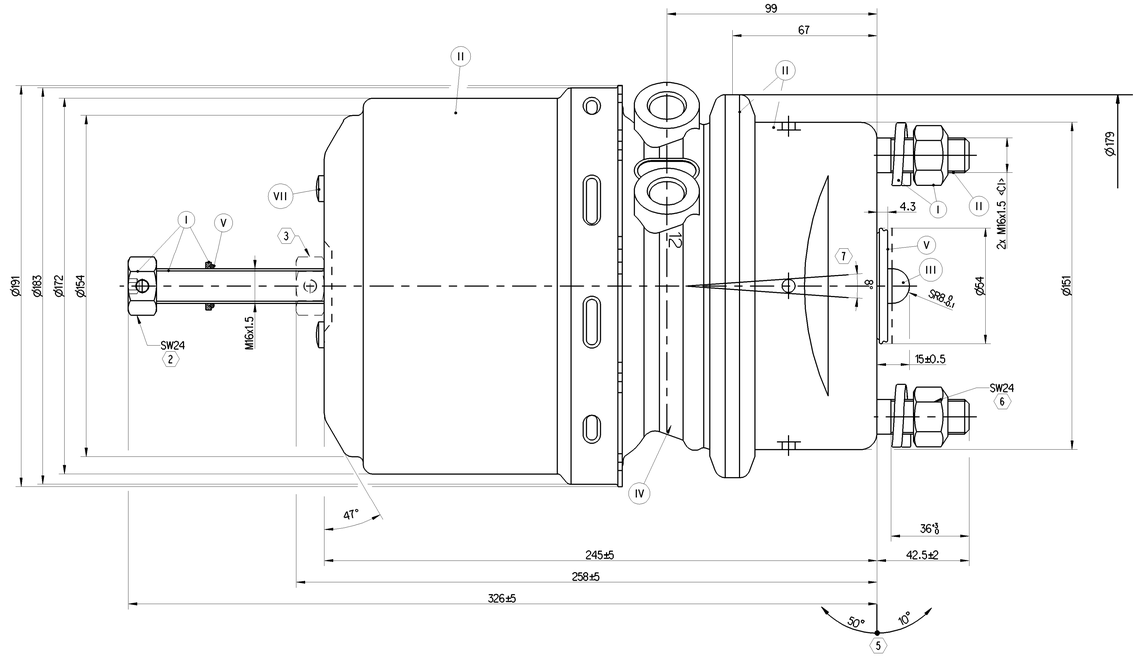

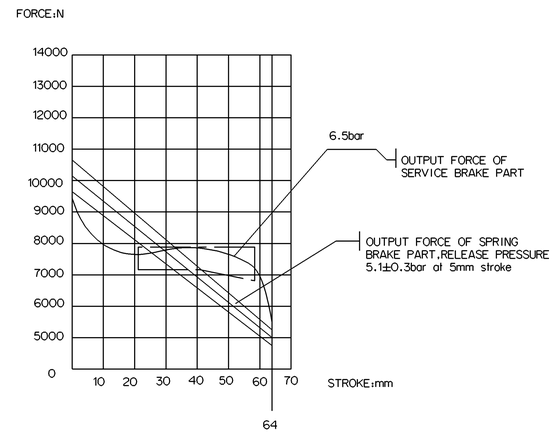

NOMINAL VALUES GIVEN FOR SERVICE SIDE. TOLERANCE BAND AS PER DIN 74060-3
NOMINAL VALUES GIVEN FOR SPRING SIDE. TOLERANCE BAND ± 5%

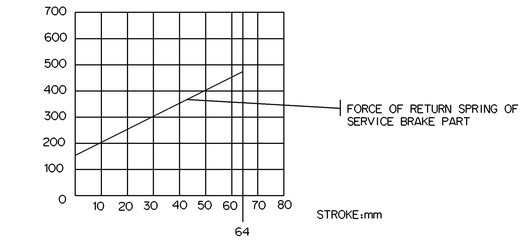

GRAPHS FOR INFORMATION ONLY

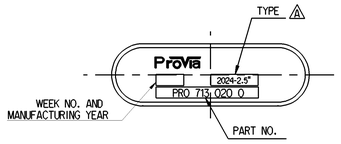

NAME PLATE

VIEW P

1. TORQUE: ≥35Nm
2. RELEASE POSITION, RELEASING WITH: 80Nm MAX.
3. DRIVING POSITION.TIGHTENING WITH: 25^{+20}_{0}Nm
4. TORQUE: MAX.34Nm
5. ADMISSIBLE INSTALLATION POSITION
6. TORQUE: 210^{0}_{-30} Nm
7. DEFLECTION: 8°MAX AT STROKE:0 mm
8. TO BE INSTALLED WITH LOWER BREATHER HOLE OPEN

TECHNICAL REQUIREMENT:

1.STROKE:
SERVICE BRAKE: ≥64mm
SPRING BRAKE: ≥64mm;

2.WORKING PRESSURE:
SERVICE CHAMBER: Pmax 10.2 bar, TEMPORARILY 13 bar;
PARKING CHAMBER: Pmax 8.5 bar. TEMPORARILY 11 bar.

3.WORKING TEMPERATURE: -40℃...+80℃;(-40℉.....+176℉)

4.THE DRAWING IS AT CAGED CONDITION,THE PARKING CHAMBER WILL BE AT UNCAGED CONDITION DURING SHIPMENT.

5.WORKING MEDIUM: AIR.

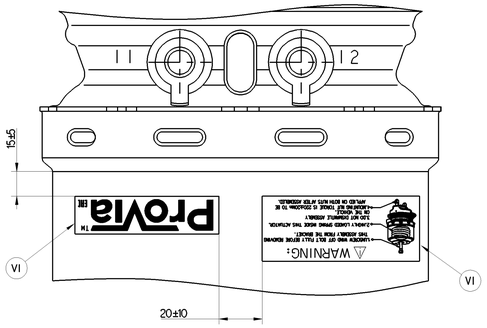

VIEW Q

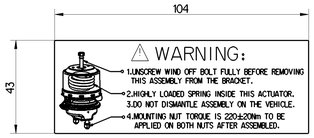

STICKER A
VI

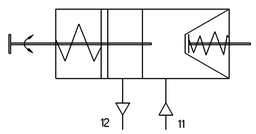

CIRCUIT DIAGRAM

STICKER B
VI

General Specifications: ISO 8015, JED-334-1, Size ISO 14405 LP							
Further Technical Data: PRO 713 080 0							
Doc. Code: 035			Sheet: 1 To 6				
General Tolerances JED-261							
Class 1)	Range of Nominal Dimensions (± mm)						
		1- 50	> 50 ≤ 180	> 180 ≤ 400	> 400		
Fine		±0.5	±1.0	±1.5	±2		
Medium	X	±1	±2	±3	±4	±3°	
Coarse		±2	±3.5	±5	±6.5		
Tapped Holes acc. JED-152							
1) Tolerance Class Applied Crossmarked							

Copyright 3°

Date	Signature
Drawn 2023-09-20	Kaviya
Checked 2023-09-20	Manivannan

Dimensions in mm

ProVia

TRISTOP - BRAKE ACTUATOR

Mass 9 kg	Scale NTS	Material No. PRO 713 020 0			Date of first issue 2020-09-16
Size A 0	CAD System CREO	ECN-No. 515320	Revision 6x A	Techn. Resp. 5400_AM	Doc./Code 005 / Language EN / Sheet 1/1
					Replacement for -

100mm

Trade Confidential: Reproduction or copying, in whole or in part, is prohibited. Any other use, in particular disclosure to third parties, is also prohibited. This document is to be returned upon request. Trade Secret: This document contains trade secrets. Any disclosure, publication, or extensive distribution of its contents may cause damage to the owner. Any recipient of this document is obliged to maintain secrecy regarding the information contained herein. Any use of the information for competitive purposes or for any other purpose which could be detrimental to the owner is prohibited. The owner reserves the right to file a cease and desist order against any person who violates these provisions. Copyright: This document and parts thereof may not be copied or made available to others without the prior written consent of the owner. Any violations will be prosecuted. Copyright notice must not be removed or altered. Non-compliance will result in liability for damages. Rev. 2 permanently assigned to Rev.1 (original version). Rev.3 permanently assigned to Rev.2. Rev.4 permanently assigned to Rev.3. Rev.5 permanently assigned to Rev.4. Rev.6 permanently assigned to Rev.5. Rev.7 permanently assigned to Rev.6. Rev.8 permanently assigned to Rev.7. Rev.9 permanently assigned to Rev.8. Rev.10 permanently assigned to Rev.9.