SURFACE PROTECTION	
I	ZINC PLATED WITH Cr6+ FREE
II	ELECTRO-PLATING
III	DACROMET
IV	SURFACE OXIDIZATION
V	RUBBER
VI	STICKERS
VII	BLACKENING

<1> SAFETY CHARACTERISTICS	0
<2> SIGNIFICANT CHARACTERISTICS	0
<CI> CUSTOMER INTERFACE	6

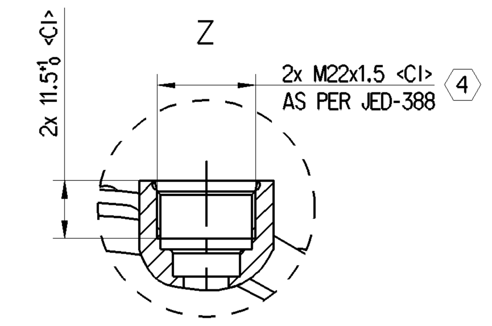

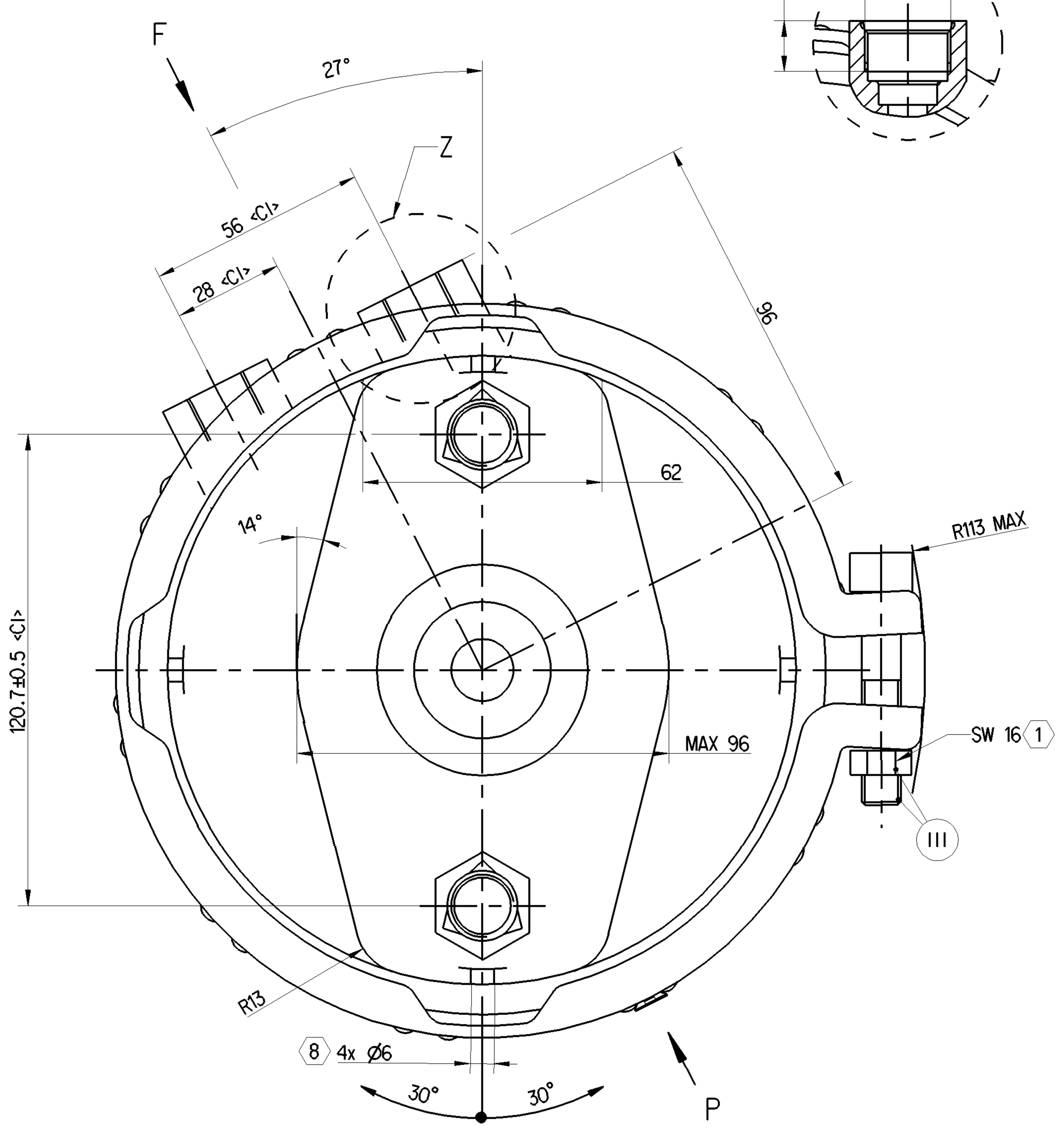

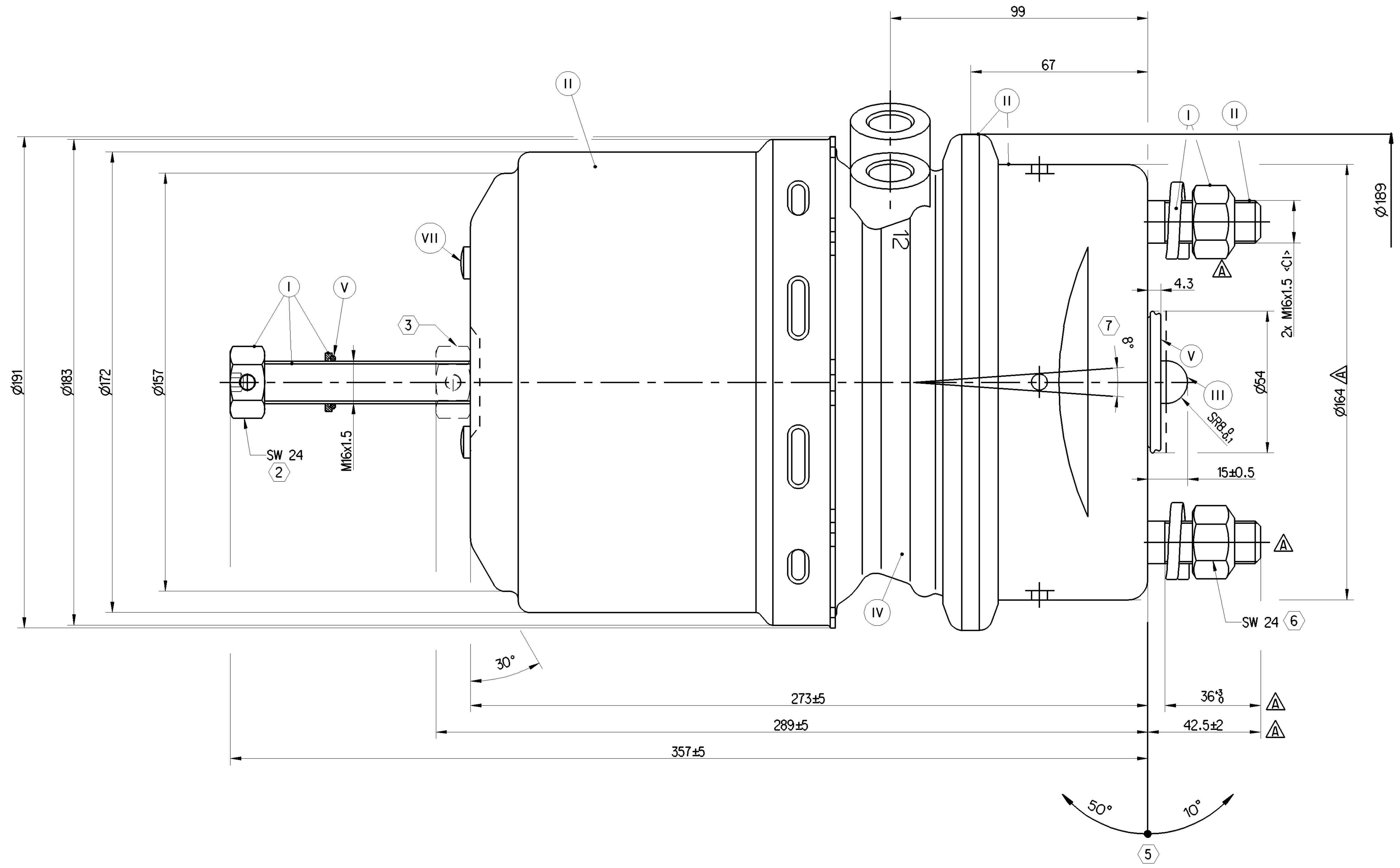

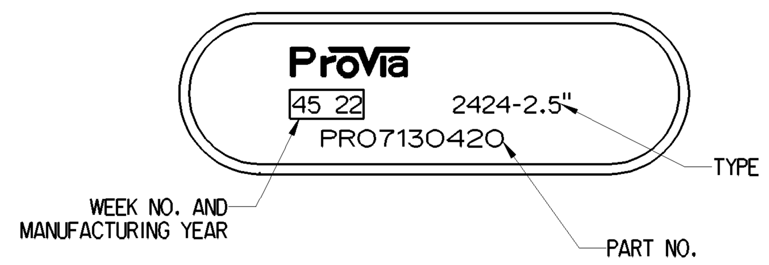

P VIEW
NAME PLATE

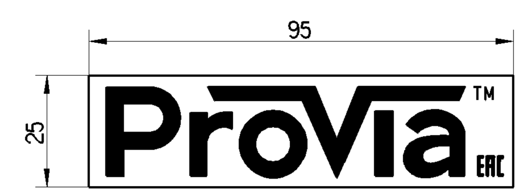

STICKER B
VI

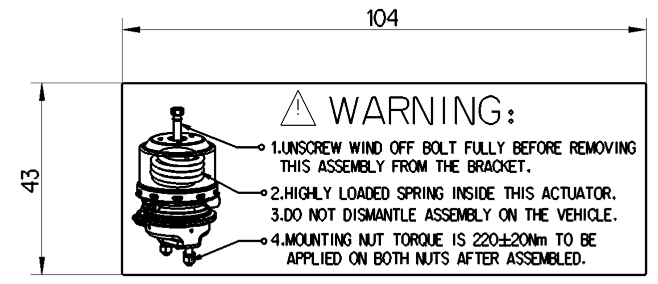

STICKER A
VI

F VIEW

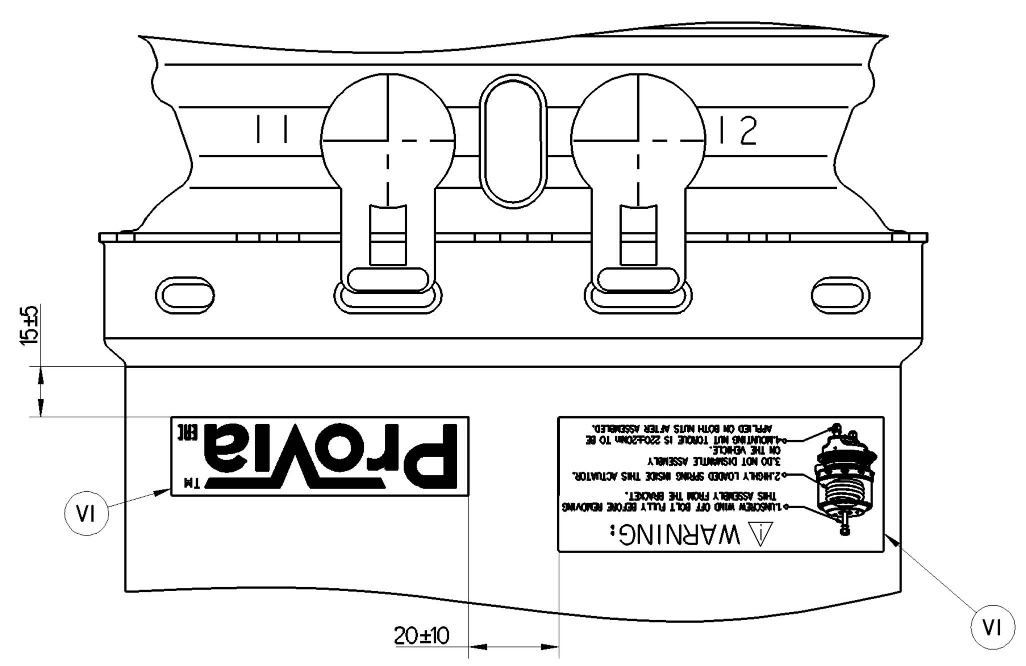

GRAPHS FOR INFORMATION ONLY

NOMINAL VALUES GIVEN FOR SERVICE SIDE, TOLERANCE BAND AS PER DIN 74060-3

NOMINAL VALUES GIVEN FOR SPRING SIDE, TOLERANCE BAND ± 5%

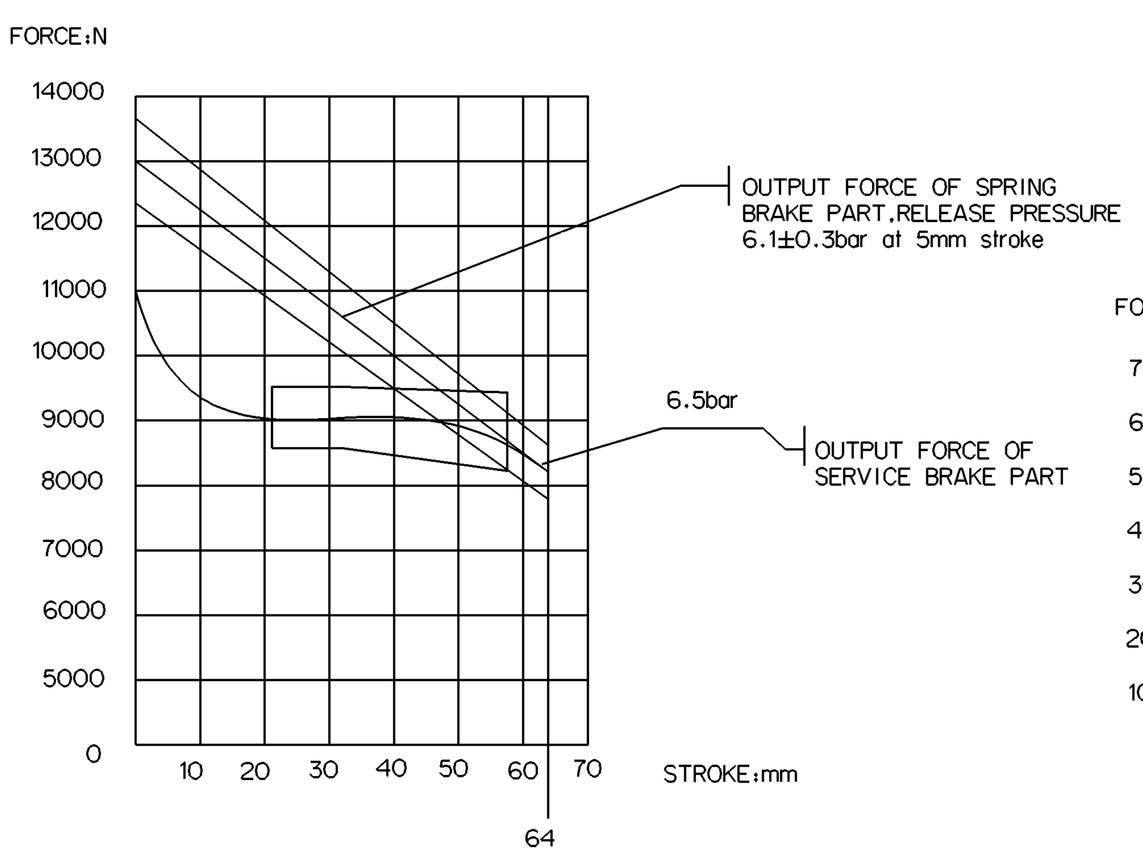

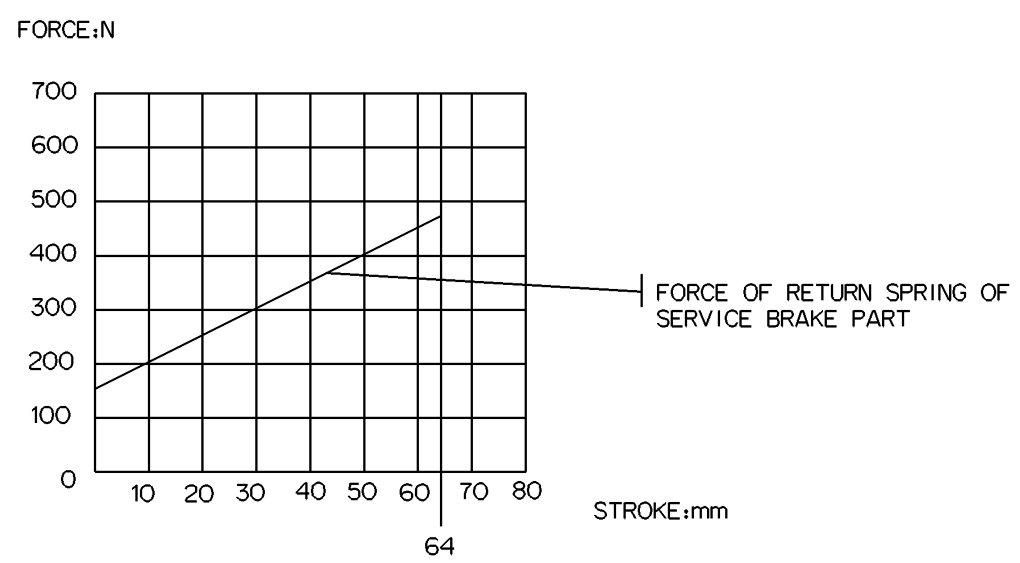

1. TORQUE: ≥35Nm
2. RELEASE POSITION, RELEASING WITH: 80Nm MAX.
3. DRIVING POSITION,TIGHTENING WITH: 25^{+20}_{0}Nm
4. TORQUE: MAX.53Nm
5. ADMISSIBLE INSTALLATION POSITION
6. TORQUE: 210^{0}_{-30} Nm
7. DEFLECTION: 8°MAX AT STROKE:0 mm
8. TO BE INSTALLED WITH LOWER BREATHER HOLE OPEN

TECHNICAL REQUIREMENT:

1.STROKE:
SERVICE BRAKE: ≥64mm
SPRING BRAKE: ≥64mm;

2.WORKING PRESSURE:
SERVICE CHAMBER: Pmax 10.2 bar, TEMPORARILY 13 bar;
PARKING CHAMBER: Pmax 8.5 bar, TEMPORARILY 11 bar.

3.WORKING TEMPERATURE: -40°C...+80°C;(-40°F.....+176°F)

4.THE DRAWING IS AT CAGED CONDITION,THE PARKING CHAMBER WILL BE AT UNCAGED CONDITION DURING SHIPMENT;

5.WORKING MEDIUM: AIR.

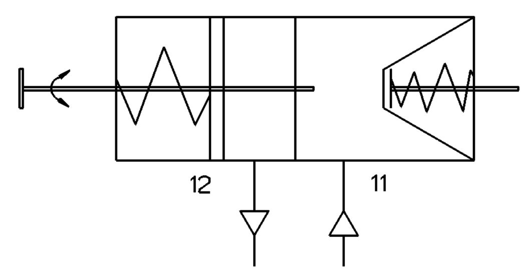

CIRCUIT DIAGRAM

General Specification: ISO 8015, JED-334-1, Size ISO 14405 LP						
Further Technical Data: PRO 713 080 0						
Doc. Code: 035			Sheet: 1 To 6			
General Tolerances JED-261						
Class 1)		Range of Nominal Dimensions (± mm) ≤ 50	> 50 ≤ 180	> 180 ≤ 400	> 400	∢
Fine		±0.5	±1.0	±1.5	±2	
Medium	X	±1	±2	±3	±4	±3°
Coarse		±2	±3.5	±5	±6.5	
Tapped Holes acc. JED-388						
1) Tolerance Class Applied Crossmarked						

Copyright ZF®		ProVia			
Date	Signature	TRISTOP - BRAKE ACTUATOR			
Drawn: 2023-10-06	Vengalesh				
Checked: 2023-10-09	Manivannan				
Dimensions in mm					
Mass: 9.7 kg	Scale: NTS	Material No.: PRO 713 042 0	Date of first issue: 2020-03-17		
			Doc.Code: 005	Language: EN	Sheet: 1/1
Size: A 0	CAD System: CREO	ECN-No.: 515469	Revision: 8x A	Techn. Resp.: 5400_AM	Replacement for: -