NUMMER NUMBER	FARBE COLOR	QUERSCHNITT(mm2) CROSS SECTION (mm2)
1	ROT \ RED	4
2	SCHWARZ \ BLACK	1.5
3	GELB \ YELLOW	
4	BRAUN \ BROWN	4
5	WEISS \ WHITE	1.5
6	WEISS - GRUEN WHITE - GREEN	1.5
7	WEISS - BRAUN WHITE - BROWN	

<1> SAFETY CHARACTERISTICS	0
<2> SIGNIFICANT CHARACTERISTICS	0
<CI> CUSTOMER INTERFACE	0

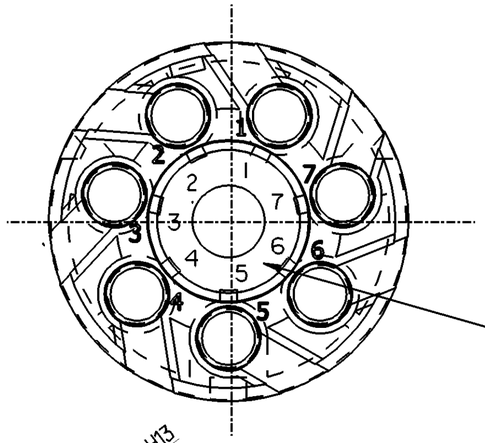

AUFKLEBER MIT ADERN NUMMER UND FARBEN
LABEL WITH CORE COLOR AND NUMBER

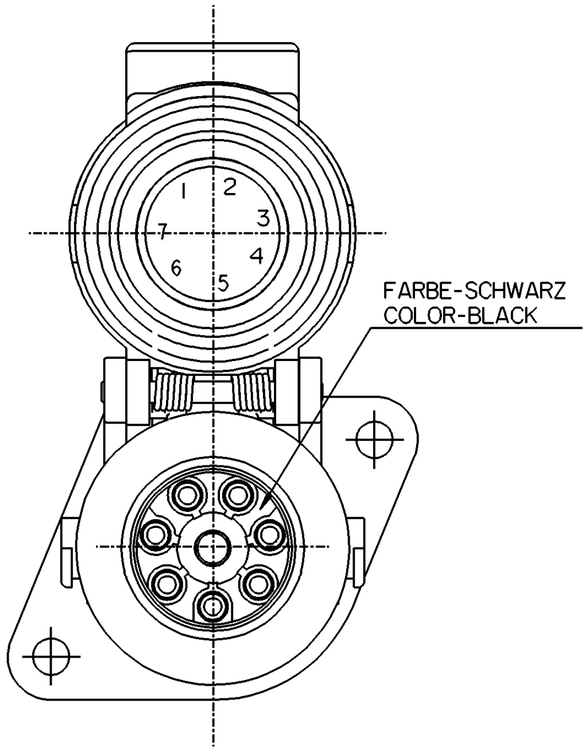

FARBE-SCHWARZ
COLOR-BLACK

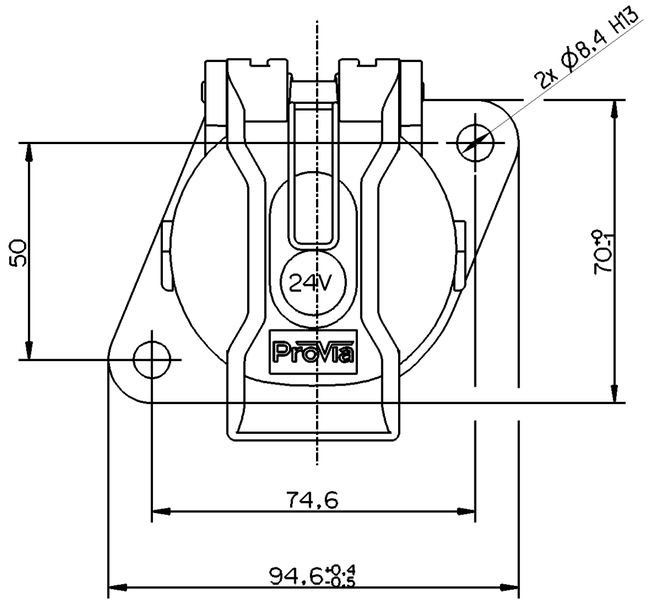

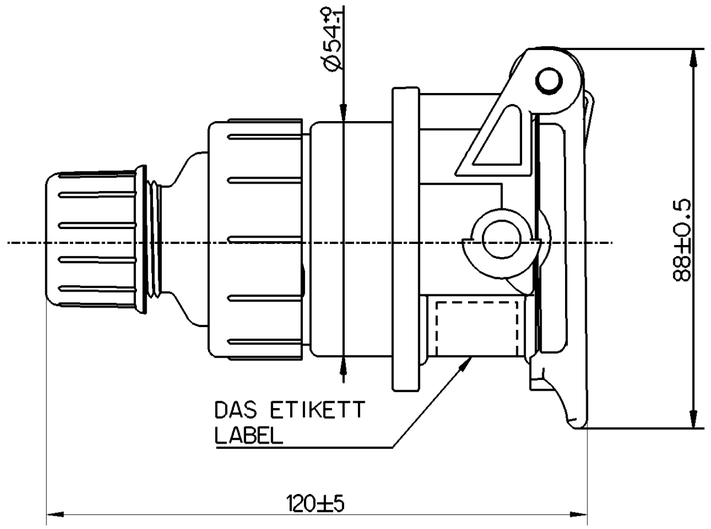

KENNZEICHNUNGSETIKETT / LABEL

BEMERKUNGEN:
1. ENTSPRICHT - ISO 7638
2. SPANNUNG - 24V
3. TEMPERATURBEREICH -40°C....+90°C
4. MATERIAL-GEHAUSE - PA6+30GF
5. SCHUTZART - IP69
6. ETIKETTENMASE - 40X20 mm

NOTES:
1. CORRSPONDS TO - ISO 7638
2. VOLTAGE - 24V
3. TEMPERATURE RANGE -40°C....+90°C
4. MATERIAL-BODY - PA6+30GF
5. DEGREE OF PROTECTION - IP69 (C)
6. LABEL DIMENSIONS - 40X20 mm

(1) LOGO ACCORDING TO JED-868
LOGO NACH JED-868

(2) MANUFACTURING WEEK / YEAR
HERSTELLUNG KW / R

GENERELLE SPEZIFIKATION : ISO 7638; ISO 4091; JED-367; JED-220; JED-762; JED-622
GENERAL SPECIFICATION : ISO 7638; ISO 4091; JED-367; JED-220; JED-762; JED-622

General Specification: ISO 8015, JED-334-1, Size ISO 14405 LP					
Further Technical Data:					
Doc. Code:			Sheet:	To	
General Tolerances JED-261					
	Range of Nominal Dimensions (± mm)				
Class 1)	≤ 50	> 50 ≤ 180	> 180 ≤ 400	> 400	∢
Fine	±0.5	±1	±1.5	±2	±3°
Medium	±1	±2	±3	±4	
Coarse	±2	±3.5	±5	±6.5	
Tapped Holes acc. -					
1) Tolerance Class Applied Crossmarked					

Copyright ZF®

Date	Signature
Drawn 2023-10-18	Murugan
Checked 2023-10-19	Vignesh

Dimensions in mm

ProVia

SOCKET ABS/EBS 7-PIN, 24V
STECKDOSE ABS/EBS 7-PIN. 24V

Mass	Scale	Material No.	Date of first issue: 2017-12-04	
0.23 kg	NTS	PRO 531 000 2	Doc.Code 005	Language ML / Sheet 1/1
Size A 2	CAD System CREO	ECN-No. 511207 / Revision 1x C	Techn. Resp. 6280_AM	Replacement for -

100mm

Non e permesso consegnare a terzi o riprodurre questo documento, ne utilizzarne il contenuto o renderlo comunque noto a terzi senza autorizzazione esplicita. Ogni infrazione costituira un evidente abuso e comportera il risarcimento dei danni subiti. E'fatta riserva di tutti i diritti derivanti da brevetti o modelli.

Copying of this document and giving it to others and the use or communication of the contents thereof, are forbidden without express authority. Contravention of this restriction will constitute an evident abuse and result in a liability to the payment of damages. All rights are reserved in the event of the grant of patent or registration of a utility model or design. This document is the subject of copyright.

Toute Communication ou reproduction de ce document, toute exploitation ou communication de son contenu sont interdites, sauf autorisation expresse. Tout manquement a cette regle constitue un abus evident et expose son auteur au versement de dommages et interets. Tous droits de proprieteé industrielle reserves, notamment en matiere de brevets et de modèles.

Weitergabe sowie Vervielfaltigung dieser Unterlage, Verwertung und Mitteilung ihres Inhalts nicht gestattet, soweit nicht ausdrucklich zugestanden. Zuwiderhandlungen stellen einen offensichtlichen Missbrauch dar und verpflichten zu Schadenersatz. Alle Rechte fuer den Fall der Patenterteilung oder Gebrauchsmuster-Eintragung vorbehalten.