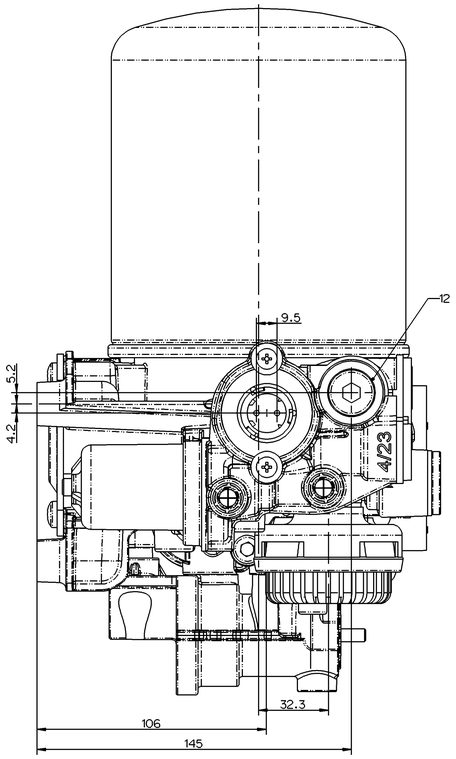

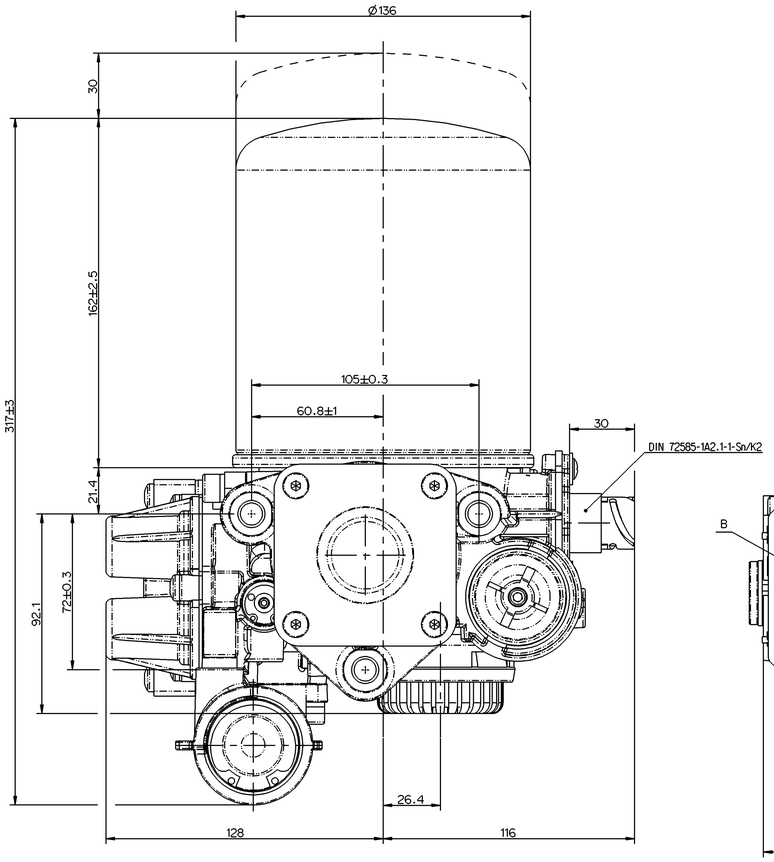

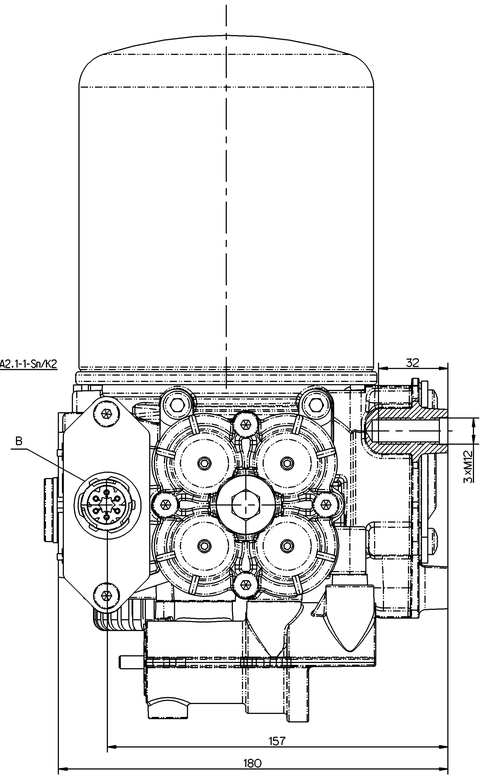

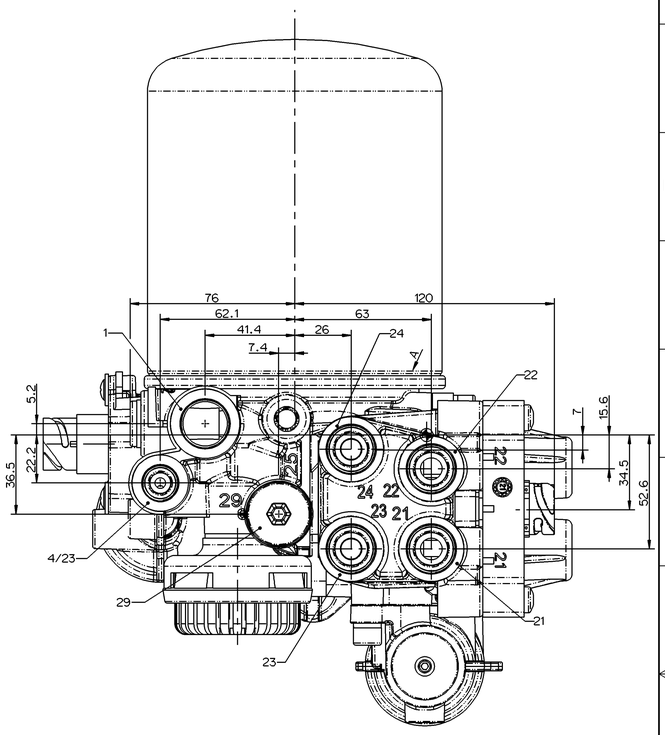

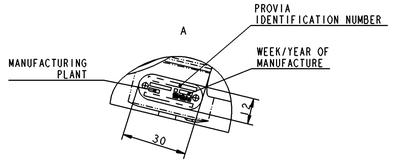

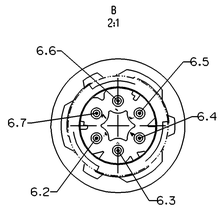

CIRCUIT TECHNICAL PARAMETERS (BAR)				
CONNECTING PORT	21	22	23	24
OPENING PRESSURE	$6.5^{0}_{-0.3}$ (COMPLETELY OPEN)	$6.5^{0}_{-0.3}$ (COMPLETELY OPEN)	$7.0^{0}_{-0.3}$	$6.5^{0}_{-0.3}$
STATIC CLOSING PRESSURE	0	≥5.0	0	≥5.0
	≥5.0	0	≥5.0	≥5.0
	≥5.0	≥5.0	0	≥5.0
	≥5.0	≥5.0	≥5.0	0
LIMITING PRESSURE			$8.5^{0}_{-0.3}$	

REMARKS:WHEN PORTS 21.22 ARE BY PASS INLET PORTS.THE OPENING PRESSURE IN PORTS 21 AND 22 IS ZERO

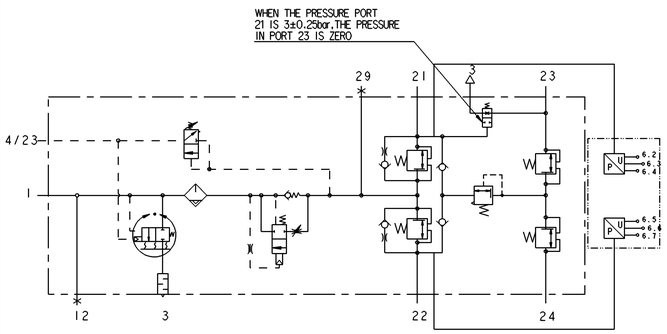

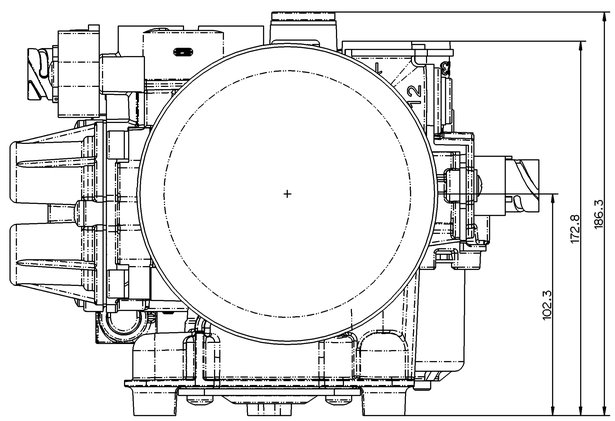

21			22		
6.2	6.3	6.4	6.5	6.6	6.7
OUTPUT	+5VDC	-0V	OUTPUT	+5VDC	-0V

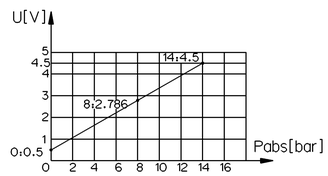

V_o=(0.2857P+0.5)/5×Vin(VDC)
V_o:INPUT VOLTAGE
P:INPUT PRESSURE(bar)
Vin: MAINS INPUT

TECHNICAL DATA

1.WORKING MEDIUM: COMPRESSED AIR

2.MAXIMUM WORKING PRESSURE:Pe MAX.=13bar

3.CUT OUT PRESSURE:12.5±0.2 bar

4.OPERATING RANGE:$1.3^{+0.7}_{0}$ bar

5.DYNAMIC PRESSURE OF SAFETY VALVE:13.0^{+1}_{0}bar

6.THERMAL RANGE OF CONTINUOUS APPLICATION:-40°C...+65°C

7.RESISTANCE TO HEAT:+80°MAX

8.HEATING VOLTAGE: 24V. CUT-IN TEMPERATURE:7±6°C
CUT-OFF TEMPERATURE: 29.5±3°C

9.THE OTHER TECHNICAL SPECIFICATIONS MEET WITH QC/T37QC/T996

AIR PROCESSING UNIT		
PORT	FUNCTION	THREAD
1	AIR COMPRESSOR INLET PORT	M22X1.5
12	EXTRA AIR INLET PORT	M16x1.5
21	FROM AIR OUTLET TO BACK SHAFT OF SERVICE CIRCUIT	M22X1.5VOSS NG12
22	FROM AIR OUTLET TO FRONT AXLE OF SERVICE CIRCUIT	M22X1.5VOSS NG12
23	FROM AIR OUTLET TO PARKING CIRCUIT	M22×1.5VOSS NG12
24	FROM AIR OUTLET TO AUXILIARY CIRCUIT	M22×1.5VOSS NG12
3	AIR OUTLET	
4/23	CONTROLLING PORT THAT IS CONNECTED WITH AIR COMPRESSOR	M16×1.5VOSS NG8
29	FROM AIR INLET TO AIR SUSPENSION	M22×1.5VOSS(BLOCK)

General Specifications: ISO 8015, JED-334-1, See ISO 14405-LP
Further Technical Data: Product Specification
Doc. Code: 035 — Sheet: 1 To 12
General Tolerances JED-261

Class		Range of Nominal Dimensions (≤ mm) ≤ 50	> 50 ≤ 180	> 180 ≤ 400	> 400	∠
Fine	±0.5	±1.0	±1.5	±2		±3°
Medium	±1	±2	±3	±4		
Coarse	±2	±3.5	±5	±6.5		

Tapped Holes acc.: JED-388
11 Tolerance Class Applied Crossmarked

Copyright 2? ®

Date	Signature	
Drawn 2023-07-10	Murugan	
Checked 2023-07-25	Pawłowski	

Dimensions in mm

PROVIA

AIR PROCESSING UNIT

Mass	Scale	Material No.	Date of first issue.	
6.06 kg	1:1	PRO 501 201 0	Doc.Code 005	Language EN / Sheet 1/1
Size A 0	CAD System CREO	EDM No. - / Revision - / Techn. Resp. 51110_AM	Replacement for -	

100mm

Tale Dokumentacja is reproducible do na dyspozycji. Nie wyrażamy na udostępnianie do osób innych niż bezpośrednio zainteresowane osoby. Nie zezwalamy na kopiowanie, wykorzystanie dane zawarte, otwarcie lub ujawnienie osobom trzecim