PROVIA PART NUMBER	PRESSURE SENSOR ③	④	⑤	⑥	⑦	MASS
PR05012060			X	X		6.120
PR05012070	X	X			X	6.175

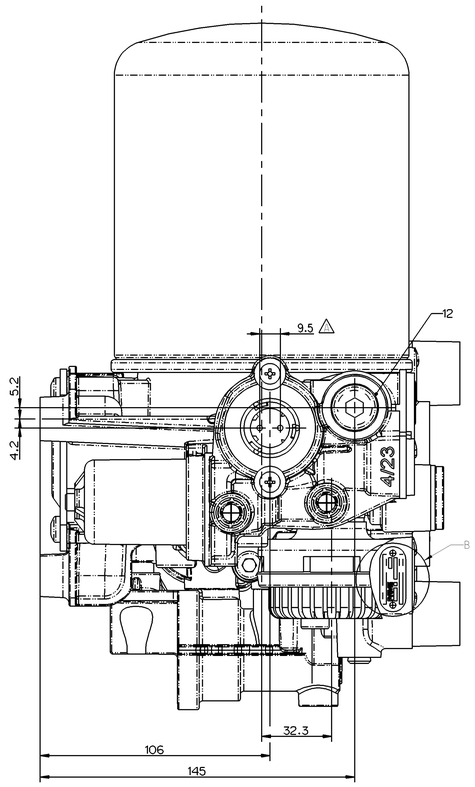

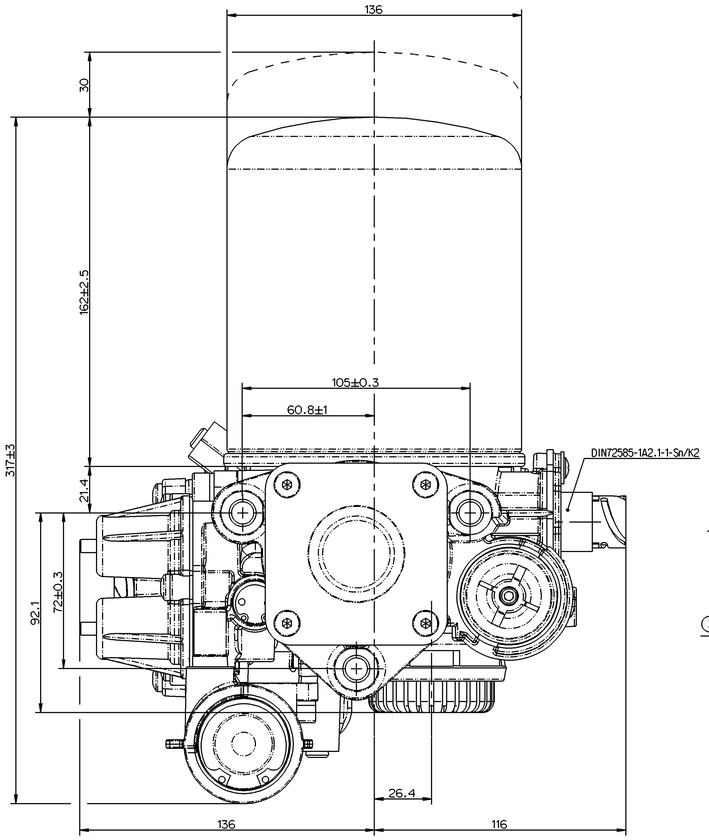

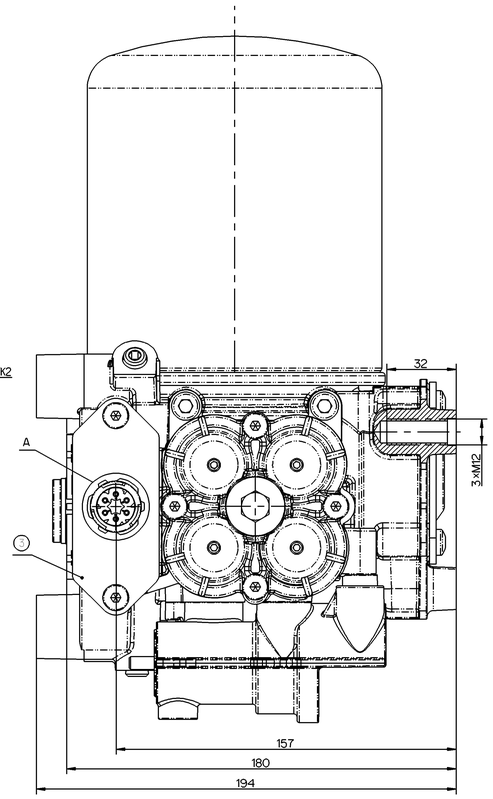

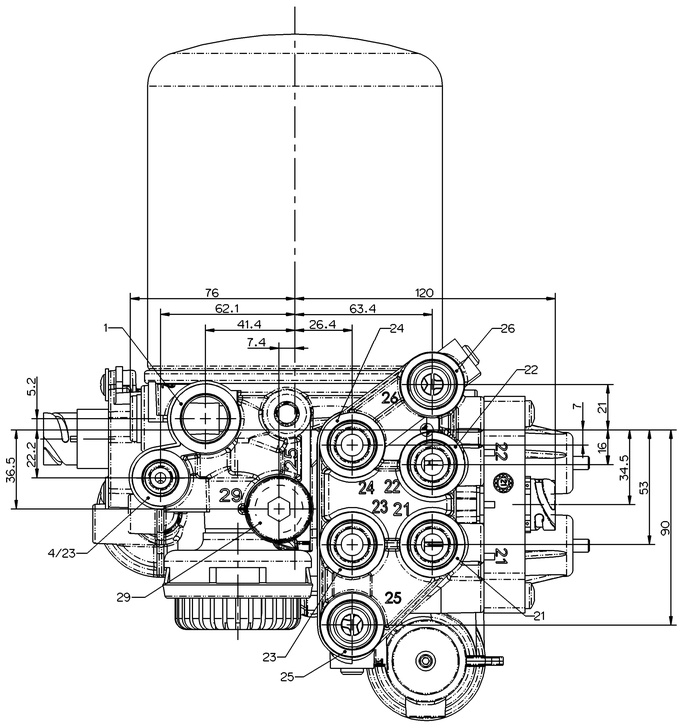

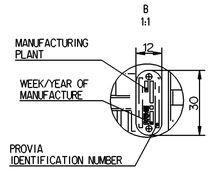

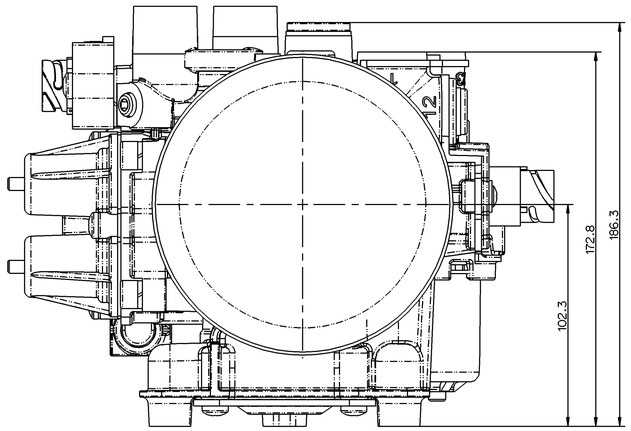

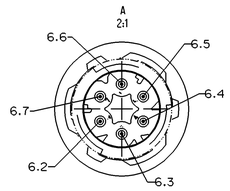

APPLICABLE FOR PR05012060 ⑤

CIRCUIT TECHNICAL PARAMETERS (BAR)				
CONNECTING PORT	21	22	23/25	24/26
OPENING PRESSURE	$6.5^{0}_{-0.3}$ (COMPLETELY OPEN)	$6.5^{0}_{-0.3}$ (COMPLETELY OPEN)	$6.2^{0}_{-0.3}$	$6.5^{0}_{-0.3}$
STATIC CLOSING PRESSURE	0	≥3.5	0	≥5.0
	≥5.0	0	≥5.0	≥5.0
	≥4.5	≥4.5	0	≥5.0
	≥5.0	≥5.0	≥5.0	0
LIMITING PRESSURE			$8.5^{0}_{-0.3}$	

REMARKS:WHEN PORTS 21,22 ARE BY PASS INLET PORTS,THE OPENING PRESSURE IN PORTS 21 AND 22 IS ZERO

APPLICABLE FOR PR05012070 ⑥

CIRCUIT TECHNICAL PARAMETERS (BAR)				
CONNECTING PORT	21	22	23/25	24/26
OPENING PRESSURE	$6.5^{0}_{-0.3}$ (COMPLETELY OPEN)	$6.5^{0}_{-0.3}$ (COMPLETELY OPEN)	$6.5^{0}_{-0.3}$	$7.0^{0}_{-0.3}$
STATIC CLOSING PRESSURE	0	≥3.5	0	≥5.0
	≥5.0	0	≥5.0	≥5.0
	≥4.5	≥4.5	0	≥5.0
	≥5.0	≥5.0	≥5.0	0
LIMITING PRESSURE			$8.5^{0}_{-0.3}$	

REMARKS:WHEN PORTS 21,22 ARE BY PASS INLET PORTS,THE OPENING PRESSURE IN PORTS 21 AND 22 IS ZERO

AIR PROCESSING UNIT		
PORT	FUNCTION	THREAD
1	AIR COMPRESSOR INLET PORT	M22X1.5
12	EXTRA AIR INLET PORT	M16x1.5(BLOCK)
21	FROM AIR OUTLET TO BACK SHAFT OF SERVICE CIRCUIT	M22X1.5VOSS
22	FROM AIR OUTLET TO FRONT AXLE OF SERVICE CIRCUIT	M22X1.5VOSS
23	FROM AIR OUTLET TO PARKING CIRCUIT	M22×1.5VOSS
24	FROM AIR OUTLET TO AUXILIARY CIRCUIT	M22×1.5VOSS
25	FROM AIR OUTLET TO PARKING BRAKING	M22×1.5VOSS NG12
26	FROM AIR OUTLET TO CLUTCH AND GEARBOX	M22×1.5VOSS NG12
3	AIR OUTLET	
4/23	CONTROLLING PORT THAT IS CONNECTED WITH AIR COMPRESSOR	M16×1.5VOSS NG8
29	FROM AIR INLET TO AIR SUSPENSION	M22×1.5VOSS(BLOCK)

WHEN THE PRESSURE IN PORT 21 IS ZERO.THE MAXIMUM PRESSURE IN PORT 23 IS 1 bar.

APPLICABLE FOR PR05012060

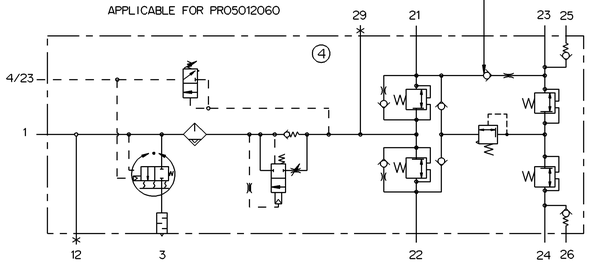

WHEN THE PRESSURE IN PORT 21 IS ZERO.THE MAXIMUM PRESSURE IN PORT 23 IS 1 bar.

APPLICABLE FOR PR05012070

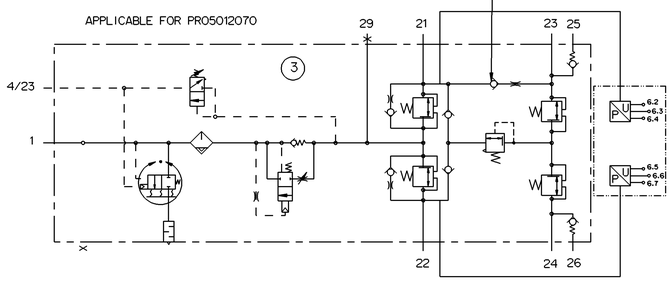

21			22		
6.2	6.3	6.4	6.5	6.6	6.7
OUTPUT	+5VDC	-0V	OUTPUT	+5VDC	-0V

TECHNICAL DATA

1.WORKING MEDIUM: COMPRESSED AIR

2.MAXIMUM WORKING PRESSURE:Pe MAX.=13bar

3.CUT OUT PRESSURE:12.5±0.2bar

4.OPERATING RANGE:$1.3^{0.7}_{0}$bar

5.DYNAMIC PRESSURE OF SAFETY VALVE:13.0^{+1}_{0} bar

6.BACK FLOW LIMITING VALVE:0.55±0.5bar

7.THERMAL RANGE OF CONTINUOUS APPLICATION:-40°C...+65°C

8.RESISTANCE TO HEAT:+80°MAX

9.HEATING VOLTAGE: 24V. CUT-IN TEMPERATURE:7±6℃
CUT-OFF TEMPERATURE: 29.5±3℃

10.THE OTHER TECHNICAL SPECIFICATIONS MEET WITH QC/T37QC/T996

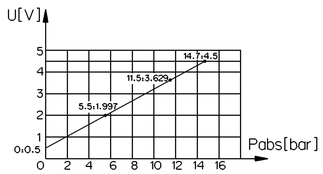

V_o=(0.2721P+0.5)/5×Vin(VDC)
V_o:INPUT VOLTAGE
P:INPUT PRESSURE(bar)
Vin: MAINS INPUT

Tale informazione non modificabile né da divulgare. Tale riproduzione o comunicazione ad altri terzi, sia parziale sia integrale, sia originaria sia trasformata, può comportare a carico della parte inadempiente il pagamento di ingenti somme a titolo di risarcimento del danno. Tale documento è stato redatto con la massima cura e diligenza. Tuttavia, non si assume la garanzia di assenza di errori o omissioni. Si ringraziamo il cliente per la cortese collaborazione e per aiutarci a migliorare il nostro servizio. Questo disegno è proprietà esclusiva della Provia Srl. Non può essere copiato o in qualsiasi modo riprodotto o trasmesso a terzi senza il nostro consenso scritto. Questo documento contiene informazioni proprietarie. Non può essere copiato o in qualsiasi modo riprodotto o trasmesso a terzi senza il nostro consenso scritto. This document is the property of Provia Srl. It may not be copied or transmitted to any third party without our written consent.

| General Specification: ISO 8015, JED-334-1, Size ISO 14405 LP | | | |