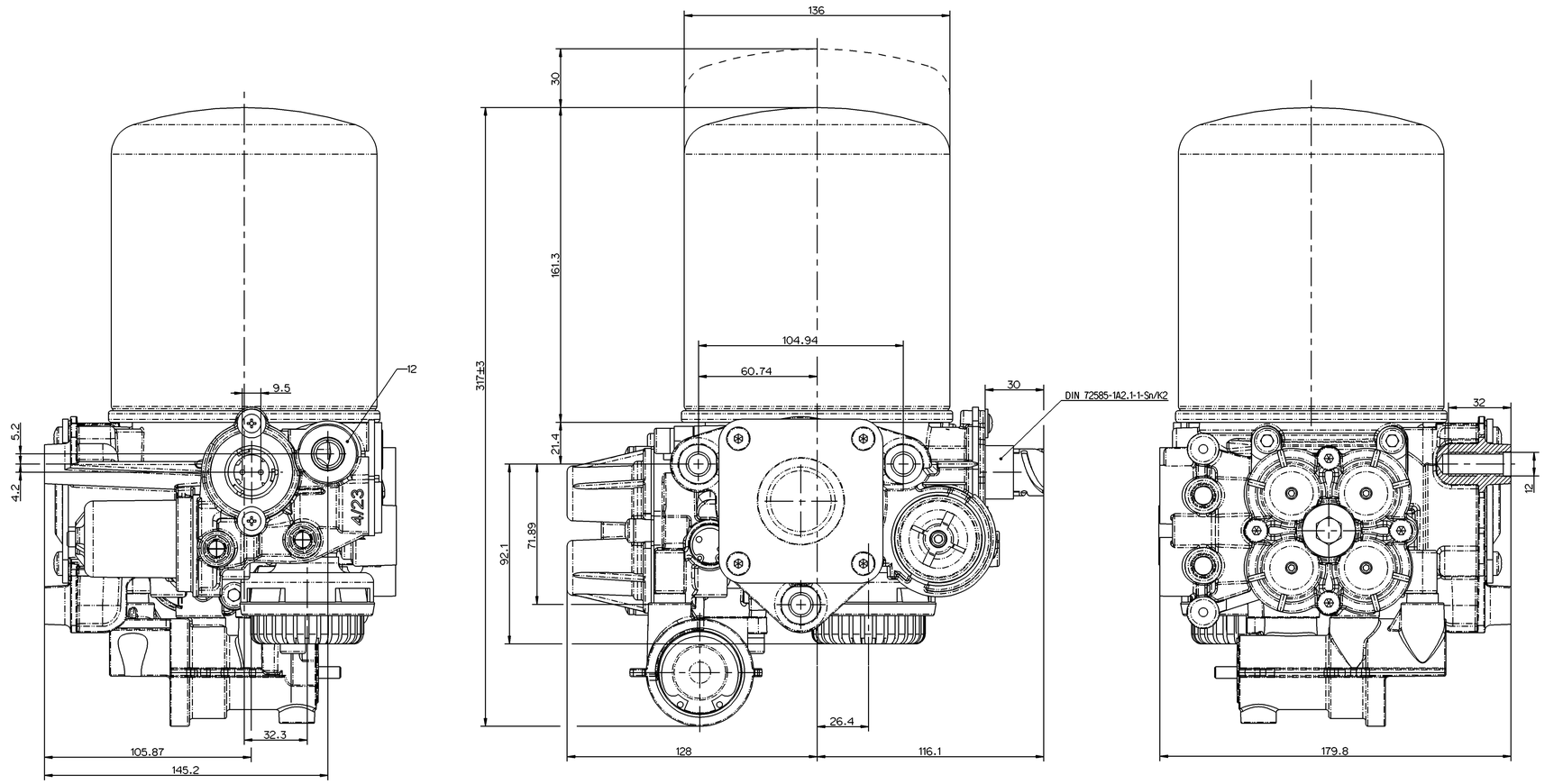

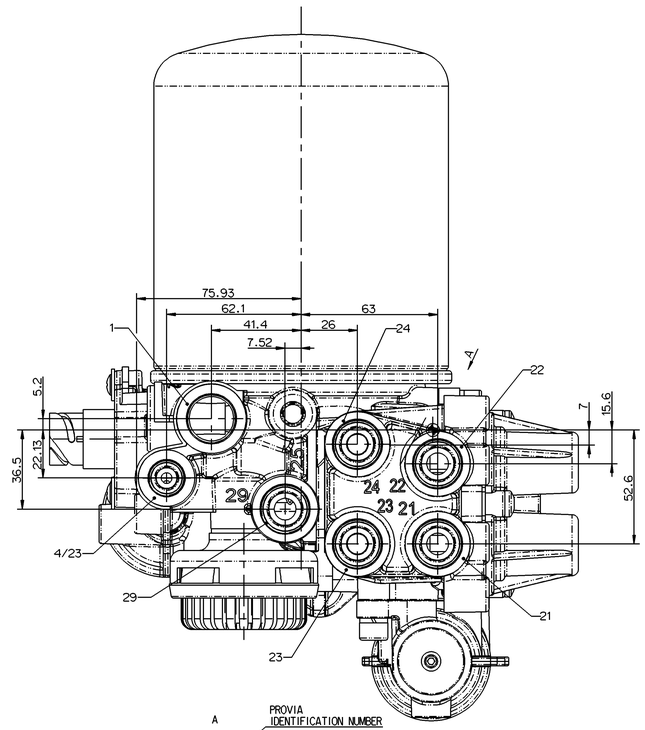

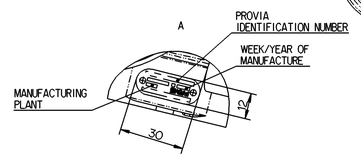

CIRCUIT TECHNICAL PARAMETERS (BAR)				
CONNECTING PORT	21	22	23	24
OPENING PRESSURE	$6.2^{0}_{-0.3}$ (COMPLETELY OPEN)	$6.2^{0}_{-0.3}$ (COMPLETELY OPEN)	$6.5^{0}_{-0.3}$	$6.2^{0}_{-0.3}$
STATIC CLOSING PRESSURE	0	≥5.0	0	≥5.0
	≥5.0	0	≥5.0	≥5.0
	≥5.0	≥5.0	0	≥5.0
	≥5.0	≥5.0	≥5.0	0
LIMITING PRESSURE			$8.5^{0}_{-0.3}$	

REMARKS:WHEN PORTS 21.22 ARE BY PASS INLET PORTS,THE OPENING PRESSURE IN PORTS 21 AND 22 IS ZERO

AIR PROCESSING UNIT		
PORT	FUNCTION	THREAD
1	AIR COMPRESSOR INLET PORT	M22X1.5
12	EXTRA AIR INLET PORT	M16x1.5
21	FROM AIR OUTLET TO BACK SHAFT OF SERVICE CIRCUIT	M22X1.5VOSS NG12
22	FROM AIR OUTLET TO FRONT AXLE OF SERVICE CIRCUIT	M22X1.5VOSS NG12
23	FROM AIR OUTLET TO PARKING CIRCUIT	M22×1.5VOSS NG12
24	FROM AIR OUTLET TO AUXILIARY CIRCUIT	M22×1.5VOSS NG12
3	AIR OUTLET	
4/23	CONTROLLING PORT THAT IS CONNECTED WITH AIR COMPRESSOR	M16×1.5VOSS NG8
29	FROM AIR INLET TO AIR SUSPENSION	M22×1.5VOSS(BLOCK)

WHEN THE PRESSURE IN PORT 21 IS ZERO, THE MAXIMUM PRESSURE IN PORT 23 IS 1 bar.

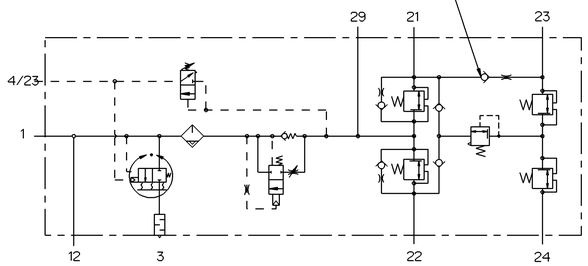

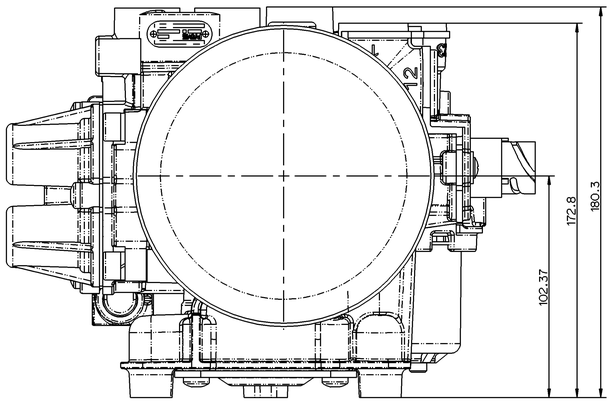

TECHNICAL DATA

1.WORKING MEDIUM: COMPRESSED AIR

2.MAXIMUM WORKING PRESSURE:Pe MAX.=13bar

3.CUT OUT PRESSURE:10.8±0.2 bar

4.OPERATING RANGE:$0.8^{+0.6}_{0}$ bar

5.DYNAMIC PRESSURE OF SAFETY VALVE:13.0^{+4}_{0} bar

6.THERMAL RANGE OF CONTINUOUS APPLICATION:-40°C...+65°C

7.RESISTANCE TO HEAT:+80°MAX

8.HEATING VOLTAGE: 24V. CUT-IN TEMPERATURE:7±6°C
CUT-OFF TEMPERATURE: 29.5±3°C

9.THE OTHER TECHNICAL SPECIFICATIONS MEET WITH QC/T37QC/T996

General Specifications: ISO 8015, JED-334-1, Size ISO 14405 LP											
Further Technical Data: Product Specification											
Doc. Code: C05					Sheet: 1 To 12						
General Tolerances JED-261											
Class	11	Range of Nominal Dimensions (± mm)									
		≥ 50	> 50 ≥ 180	> 180 ≥ 400	> 400						
Fine		±0.5	±1.0	±1.5	±2						
Medium	X	±1	±2	±3	±4	±3°					
Coarse		±2	±3.5	±5	±6.5						
Tapped Holes acc. JED-389											
11. Tolerance Class Applied Crosmarked											

Copyright 2T®

Date	Signature	Provia
Drawn 2023-07-10	Murugan	AIR PROCESSING UNIT
Checked Pdwłowski	2023-07-25	

Dimensions in mm

Mass	Scale	Material No.	Doc.Code	Language	Sheet
6.02 kg	1:1	PRO 501 208 0	005	EN	1/1
Size A 0	CAD System CREO	ECN/No. - / Revision - / Techn. Reg. 5110_AM	Replacement for -		

100mm

Tato dokumentace, na kterou se vztahuje tato nabídka, je majetkem firmy Provia. Nesmí být bez našeho souhlasu zpřístupněna jakékoliv jiné osobě, firmě nebo organizaci a nesmí být bez našeho souhlasu použita k jakému účelu. Tato dokumentace je chráněna autorským zákonem. Porušení ustanovení o ochraně autorského práva bude stíháno. Provia si vyhrazuje právo provádět bez předchozího upozornění změny v technickém provedení a v rozsahu dodávky. Tato dokumentace je v souladu s platnými normami. Provia nenese žádnou odpovědnost za jakoukoliv ztrátu, poškození nebo náklady vzniklé v důsledku jakéholiv nesprávného použití nebo spoléhání se na informace obsažené v tomto dokumentu. Provia nenese žádnou odpovědnost za jakoukoliv ztrátu, poškození nebo náklady vzniklé v důsledku jakéholiv nesprávného použití nebo spoléhání se na informace obsažené v tomto dokumentu.

This document, to which this offer relates, is the property of Provia. It cannot be made available to any other person, firm or organisation without our consent and it cannot be used for any purpose without our consent. Copyright in this document and any copy to others are the sole property of Provia. Provia reserves the right to make alterations to the specification and to the scope of supply without prior notice. This document is in accordance with the applicable standards. Provia shall not be responsible for any loss, damage or costs arising as a result of the misuse or reliance on information contained in this document. Provia shall not be responsible for any loss, damage or costs arising as a result of the misuse or reliance on information contained in this document.