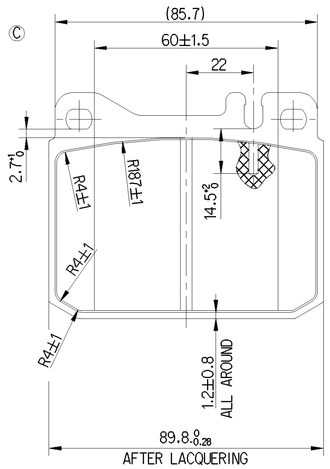

VIEW FROM THE BACK SIDE

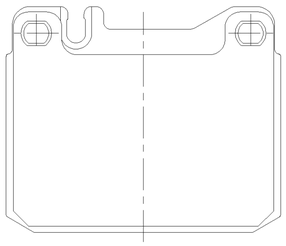

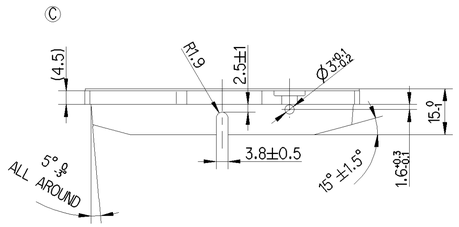

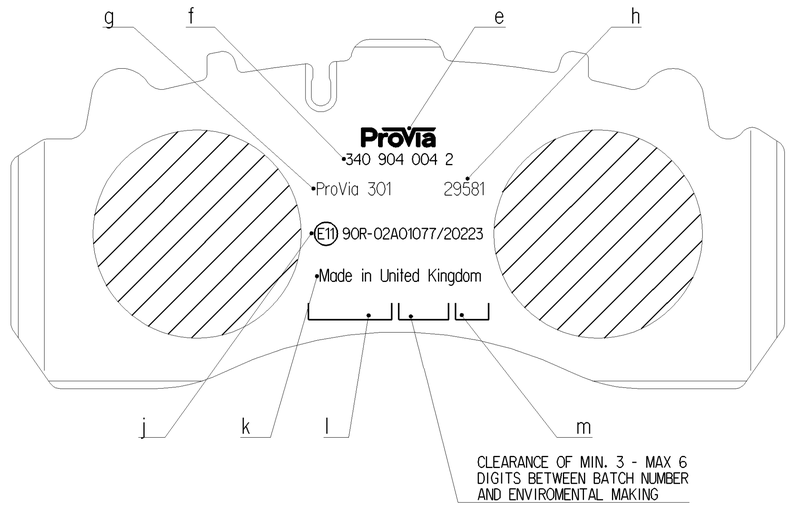

DRAFT FOR TEXT AREAS EXPLANATION ONLY. DRAFT CAN BE DIFFERENT TO THE REAL PART.

IDENTIFI-CATION	DESIGNATION	KIND OF MARKING	COLOUR	SIZE OF TYPES RESP. STANDARD	REMARKS
e	PROVIA - LOGO	TAMPON / UV-BRANDING	WHITE	SIZE 6	
f	PROVIA - SET NUMBER	TAMPON / UV-BRANDING	WHITE	HEIGHT OF CHARACTERS 5±1MM HEIGHT OF CHARACTERS AND POSITION OF THE MARKING MAY BE ACC. TO THE SHAPE OF THE BACKING PLATE	
g	PROVIA - SALES REFERENCE, US-CODE (WHEN EXIST)	TAMPON / UV-BRANDING	WHITE		
h	NUMBER OF WVA	TAMPON / UV-BRANDING	WHITE		
j	NUMBER OF ECE	TAMPON / UV-BRANDING	WHITE		
k	COUNTRY OF ORIGIN	TAMPON / UV-BRANDING	WHITE		
l	BATCH NUMBER	TAMPON / UV-BRANDING	WHITE		
m	ENVIROMENTAL MARKING ACC. TO SAE J866 JUL2012 OR LATEST	TAMPON / UV-BRANDING	WHITE		

POS.	NAME	QUANTITY
1	BRAKE PAD	4

General Specification: JED-334-1 , Size ISO 14405 LP
Further Technical Data: Part Specification
Doc. Code: 014 Sheet: To
General Tolerances JED-261

Class 1)	Range of Nominal Dimensions (± mm) ≤ 50	> 50 ≤ 180	> 180 ≤ 400	> 400	∡
Fine	0.5	1.0	1.5	2.0	±3°
Medium X	1.0	2.0	3.0	4.0	
Coarse	2.0	3.5	5.0	6.5	

Tapped Holes acc. -
1) Tolerance Class Applied Crossmarked

Copyright WABCO®

	Date	Signature
Drawn	2018-07-20	Cebula
Checked	2018-07-24	Marcinkiewicz
Expert	Lisziwan	

ProVia
PAD KIT

Mass	Scale	Material No.	Date of first issue: 2015-03-26		
2.1 KG	1:1	340 904 004 2	Doc.Code 005	Language EN	Sheet 1/1
Size A 1	CAD System CREO				

ECN-No.	Revision	Techn. Resp.	Replacement for
176942	5 x C	0959	-

100mm

Toute Communication ou reproduction de ce document, toute exploitation ou communication de son contenu sont interdites, sauf autorisation écrite. Tous droits de propriété industrielle réservés, notamment en matière de brevets et de modèles.

Weitergabe sowie Vervielfältigung dieser Unterlage, Verwertung und Mitteilung ihres Inhalts nicht gestattet, soweit nicht ausdrücklich zugestanden. Gewerbliche Schutzrechte vorbehalten, insbesondere für Patent- und Gebrauchsmustererteilung.

Non è permesso consegnare a terzi o riprodurre questo documento, né utilizzare il contenuto o renderlo comunque noto a terzi senza esplicita autorizzazione. Ogni diritto di proprietà industriale è riservato, in particolare quello di brevetto o registrazione di un modello utile o ornamentale.

Copying of this document and giving it to others and the use or communication of the contents thereof, are forbidden without express authority. Offenders are liable to the payment of damages. All rights are reserved in the event of the grant of patent or registration of a utility model or design. This document is the subject of copyright.