POS	MATERIAL	SURFACE PROTECTION
III	ALUMINIUM ALLOY	HARD ANODIZING
II	STEEL	SALT BATH (BLACK)
I	STEEL	GALVANIZED (WHITE)

SAFETY CHARACTERISTICS	0
SIGNIFICANT CHARACTERISTICS	0
CUSTOMER INTERFACE	8

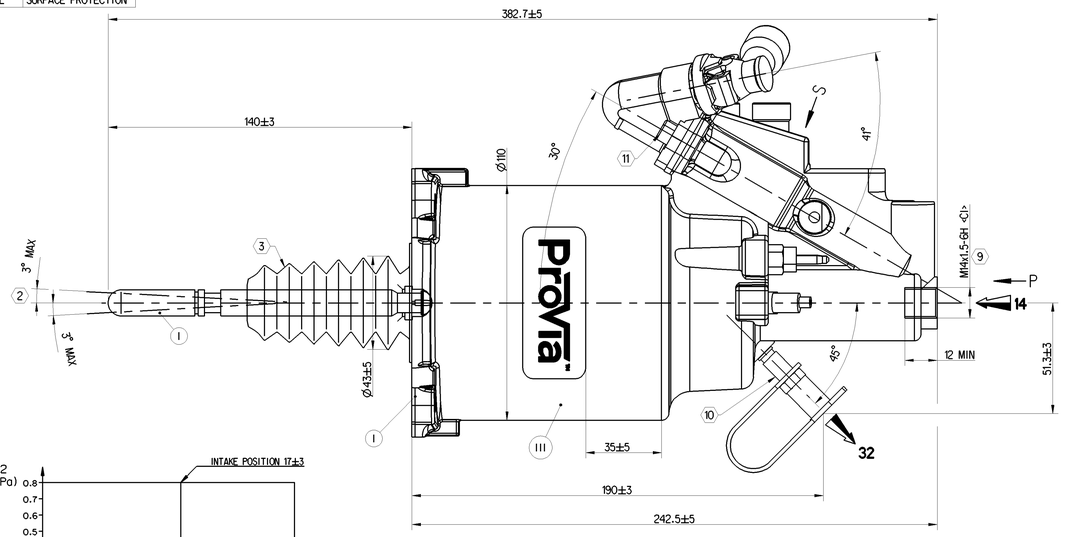

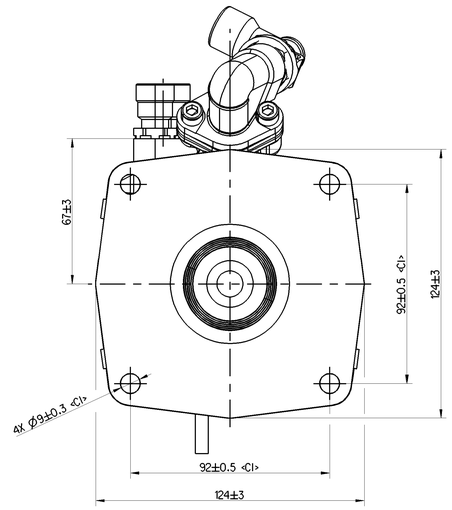

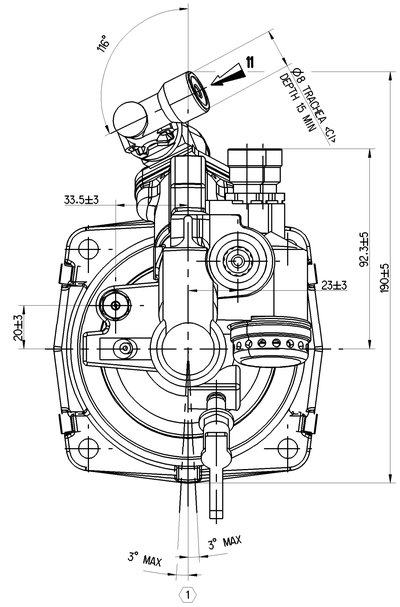

VIEW-P

TECHNICAL INFORMATION

1. HYDRAULIC TANK DIA : Ø25mm
2. AIR TANK DIA : Ø100mm
3. HYDRAULIC WORKING PRESSURE 4MPa
4. HYDRAULIC WORKING PRESSURE MAX 12MPa
5. AIR WORKING PRESSURE MAX 1MPa
6. WORKING TEMPERATURE : -40°C TO +80°C
7. MEDIUM
   HYDRAULIC MEDIUM : DOT 4 BASED BRAKE FLUID IN ACCORDANCE WITH SAE J 1703
   PNEUMATIC MEDIUM : AIR
8. OIL VOLUME INPUT : V=(SHxC)+K
   K : ABSORPTION AT 120 BAR FOR C=0, K<1.5cm³
   SH : HYDRAULIC SECTIONAL AREA = 4.9 cm²
   C : GEAR DISENGAGING STROKE
9. OPEN PORTS ARE FITTED WITH CLOSURE PLUG FOR STORAGE AND TRANSMIT PURPOSE
10. CAUTION : DO NOT ACTUATE THE DEVICE IF NOT FITTED ON ITS MOUNTING BRACKET
11. WITH STROKE LIMITER IN THE DEVICE
12. DO NOT OPERATE THIS PRODUCT WITHOUT INSTALLATION OR FIXATION ON THE BRACKET

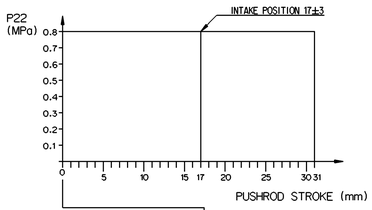

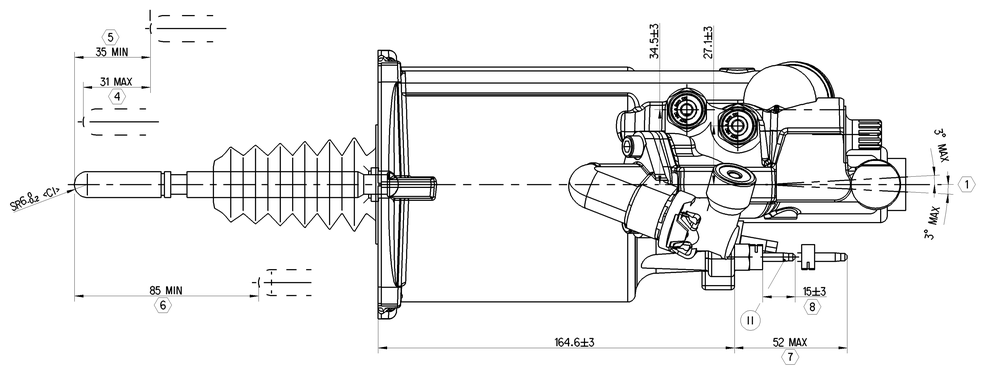

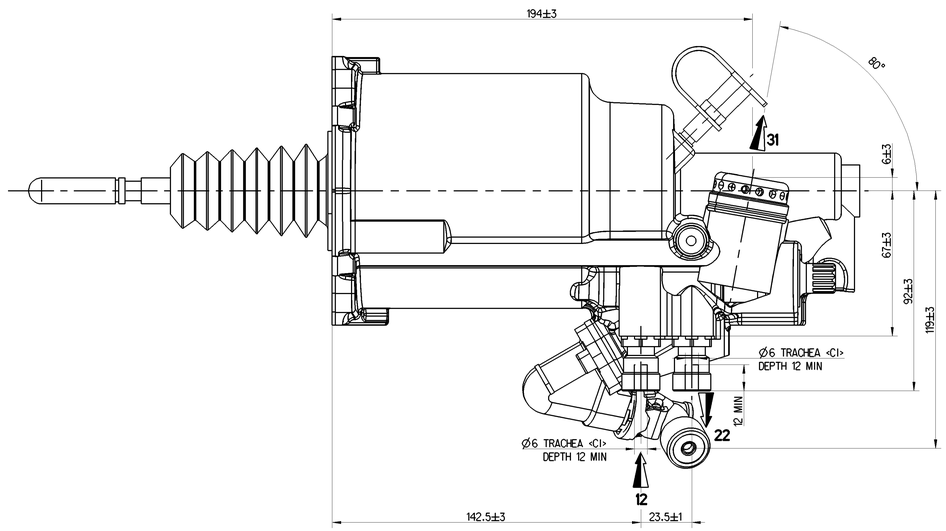

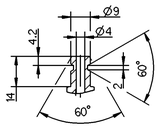

BLEEDER SCREW END FITTING DETAILS DIMENSION

VIEW-S
NAME PLATE DETAILS

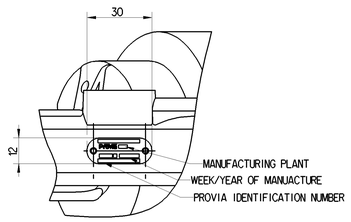

NOTES

1	DEVICE EXTREME POSITION WHEN BLEEDING
2	MISALIGNMENT OF PUSHROD IN ANY DIRECTION
3	BOOT THERMAL RANGE -40°C TO +130°C
4	GEAR DISENGAGING STROKE
5	POSITION TO NOTE (CLUTCH IN NEW CONDITION)
6	STROKE
7	ADJUSTMENT OF WEAR INDICATOR
8	POSITION WHEN DELIVERED
TORQUE FOR CONNECTION	
9	25Nm MAX
10	5^{+5}_{0} Nm
11	10^{+5}_{0} Nm

PERFORMANCE GRAPH

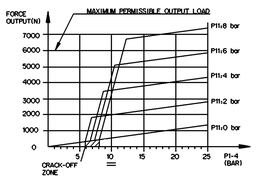

CRACK-OFF PRESSURE 6.9±1 BAR WHEN P11=7 BAR

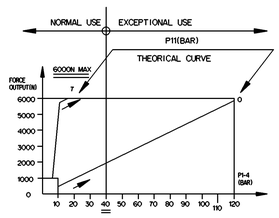

SCHEMATIC DIAGRAM

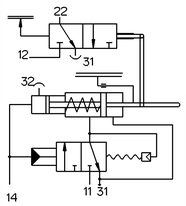

MARKING OF PORTS	
11	AIR INLET
14	OIL INLET
12	AIR INLET
22	AIR OUTLET
31	AIR EXHAUST
32	BLEED SCREW

General Specification: ISO 8015, JIS-B3401-1, Size ISO 14405 LP
Further Technical Data: PRO 411 017 0
Doc. Code: 035 | Sheet: 1 | To 5

General Tolerances JIS-B401

		Range of Nominal Dimensions (≧ mm)					
Class	1)	≦ 50	> 50 ≦ 180	> 180 ≦ 400	> 400		
Fine		±0.5	±1.0	±1.5	±2		
Medium	X	±1	±2	±3	±4		±3°
Coarse		±2	±3.5	±5	±6.5		

Tapped Holes acc. -
1) Tolerance Class Applied Crossmarked

Dimensions in mm

Mass	Scale	Material No.	Date of first issue	2023-11-07
3.2 kg	NTS	PRO 411 028 0	Doc.Code 005	Language EN	Sheet 1/1
Size A 0	CAD System CREO			

Copyright ©

Date	Signature
Drawn 2023-11-02	Kaviya
Checked 2023-11-07	Manivannan

ProVia
CLUTCH SERVO

ECN No.	Revision	Replaced by	Replacement for
•	•	5630_AM	•

Scale 1:1 Mm