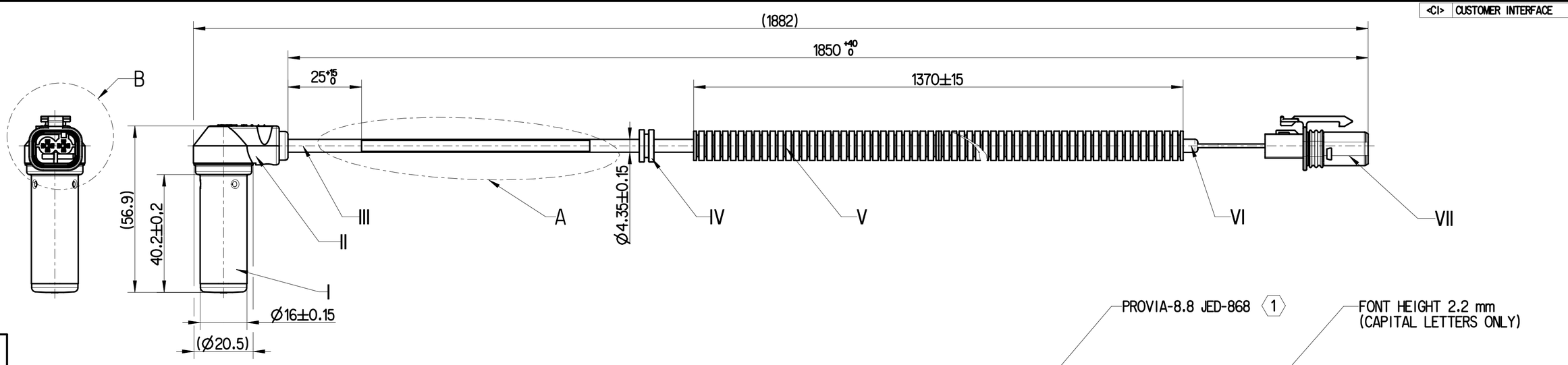

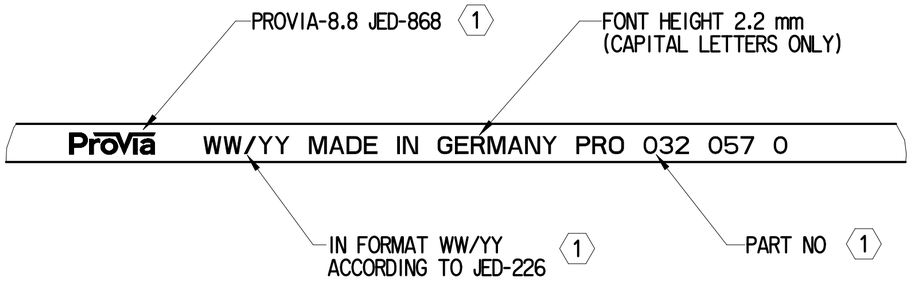

A
2:1

CODING A
GHW -NR. 18169 000 002
COLOUR: GRAY

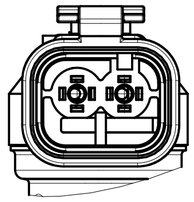

B
2:1

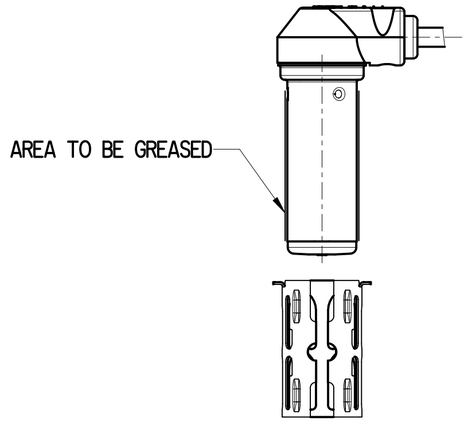

BEFORE ASSEMBLY VIEW

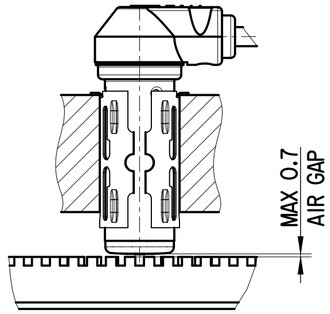

ASSEMBLY VIEW
(IN VEHICLE)

THERMAL RANGE OF APPLICATION

I	-40°C...+200°C +210°C[1h]
II	-40°C...+150°C +180°C[1h]
III	-40°C...+150°C
IV	-40°C...+130°C
V	-40°C...+140°C
VI	-55°C...+125°C
VII	-40°C...+100°C

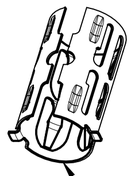

Clamping bush

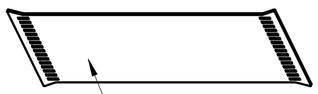

PRO 503 062 4

1. ABRASION-RESISTANT LASER PRINTING. TEXT VISIBLE AGAINST THE BACKGROUND.
2. DEGREE OF PROTECTION (SENSOR HEAD) 6K9K
3. MINIMUM CABLE BEND RADIUS R 15

Additional equipment		
Name	Number	QTY
Clamping bush	-	1
Grease	PRO 503 062 4	1

General Specification: ISO 8015, JED-334-1, Size ISO 14405 LP
Further Technical Data: Product Specification
Doc. Code: 035 Sheet: 1 To 7

General Tolerances JED-261

Class 1)		Range of Nominal Dimensions (± mm) ≤ 50	> 50 ≤ 180	> 180 ≤ 400	> 400	∢
Fine		±0.5	±1	±1.5	±2	±3°
Medium		±1	±2	±3	±4	
Coarse	X	±2	±3.5	±5	±6.5	

Tapped Holes acc.
1) Tolerance Class Applied Crossmarked

Copyright ZF®

Date	Signature
Drawn 2024-03-27	Blazejak
Checked 2024-03-27	Pawlowski

Dimensions in mm

ProVia
Inductive Sensor (ABS)

Mass	Scale	Material No.	Date of first issue: 2024-03-27		
0.112 kg	1:1 (2:1)	PRO 032 057 0	Doc.Code 005	Language EN	Sheet 1/1
Size A 2	CAD System CREO	ECN-No. - / Revision - / Techn. Resp. 6310_AM	Replacement for		

100mm

Toute Communication ou reproduction de ce document, toute exploitation ou communication de son contenu sont interdites, sauf autorisation expresse. Tout manquement à cette règle constitue un abus évident et expose son auteur au versement de dommages et intérêts. Tous droits de propriété industrielle réservés, notamment en matière de brevets et de modèles.
Weitergabe sowie Vervielfältigung dieser Unterlage, Verwertung und Mitteilung ihres Inhalts nicht gestattet, soweit nicht ausdrücklich zugestanden. Zuwiderhandlungen stellen einen offensichtlichen Missbrauch dar und verpflichten zu Schadenersatz. Alle Rechte fuer den Fall der Patenterteilung oder Gebrauchsmuster-Eintragung vorbehalten.
Non è permesso consegnare a terzi o riprodurre questo documento, né utilizzarne il contenuto o renderlo comunque noto a terzi senza autorizzazione esplicita. Ogni infrazione costituirà un evidente abuso e comporterà il risar cimento dei danni subiti. E' fatta riserva di tutti i diritti derivanti da brevetti o modelli.
Copying of this document and giving it to others and the use or communication of the contents thereof, are forbidden without express authority. Contravention of this restriction will constitute an evident abuse and result in a liability to the payment of damages. All rights are reserved in the event of the grant of patent or registration of a utility model or design. This document is the subject of copyright.

dw: PRO0320570_____.A02 Version: -.1 / state: Under Review / mdl: PRO0320570_____.A02