S.NO	MATERIAL	SURFACE PROTECTION
I	ALUMINIUM ALLOY	BALL BURNISH BRIGHT
II	NBR	NO TREATMENT
III	STEEL	ZINC PLATING
IV	STEEL	BLACK E-COAT
V	HDPE	NO TREATMENT

SAFETY CHARACTERISTICS	0
SIGNIFICANT CHARACTERISTICS	0
CUSTOMER INTERFACE	0

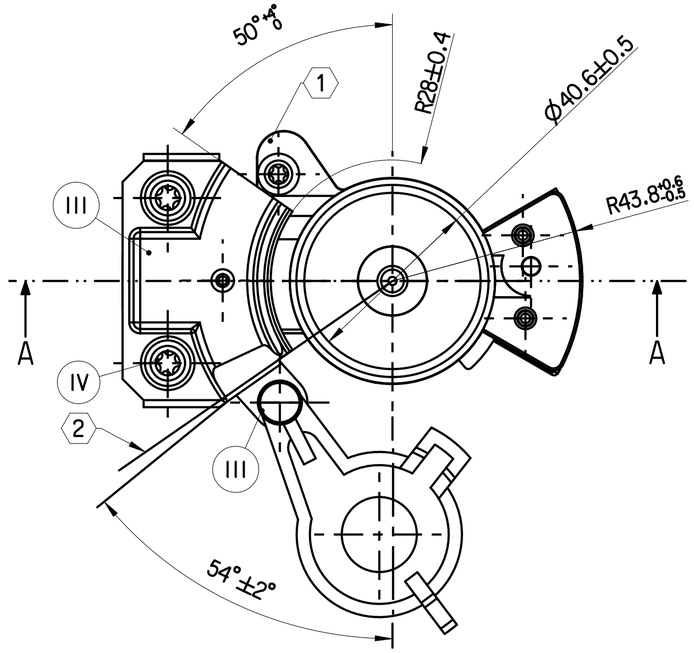

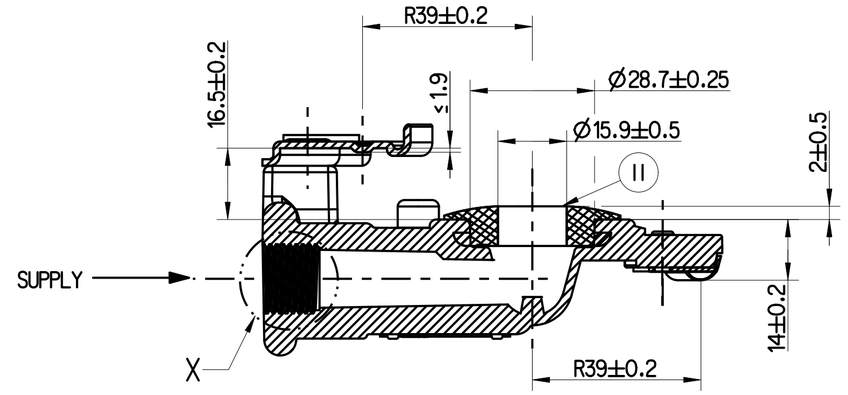

SECTION A-A

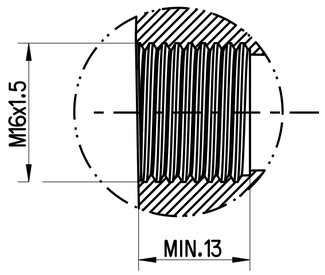

DETAIL-X
2:1

NOTES

1. POKA-YOKE
2. STOP
3. LID COLOUR-YELLOW
   LID MUST BE CLOSED WHEN NOT IN USE
4. DIRECTION OF LID ROTATION
5. PART NUMBER AND DATE OF MANUFACTURE ARE SHOWN HERE.

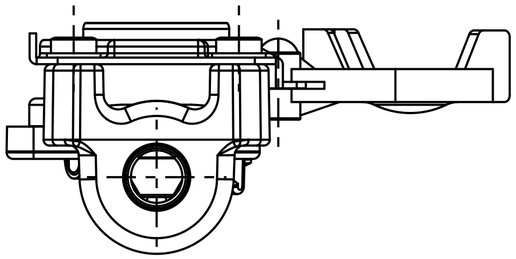

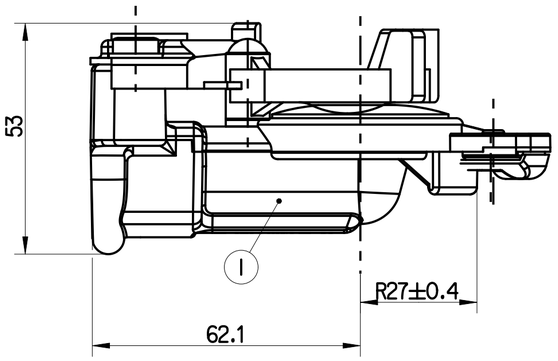

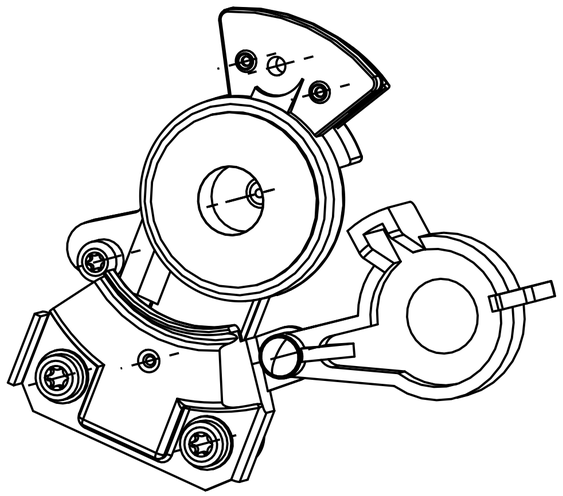

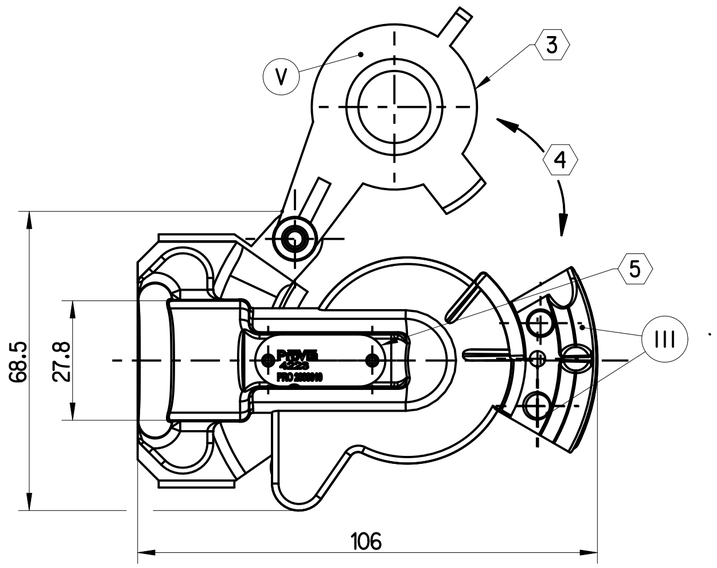

S.No	NOTES	
1	WORKING MEDIUM	COMPRESSED AIR
2	WORKING TEMPERATURE	-40° C TO +70° C
3	MAXIMUM INLET PRESSURE	8.5 bar
4	RECOMMENDED INSTALLATION TORQUE	31±3 Nm (CUSTOMER TO ENSURE THE TORQUE)
5	TRACTOR AND TRAILER COUPLING FLOW DIAMETER IS EQUIVALANT AND MIN. FLOW PASSAGE	$103mm^2$ (Ø11.4 mm)
6	CIRCUIT DIAGRAM SYMBOL	ISO 1219
7	PART PRESSURE TIGHT UPTO	10 bar
8	YELLOW COLOR COUPLING FOR CONTROL SIDE	

General Specification: ISO 8015, JED-334-1, Size ISO 14405 LP
Further Technical Data: PRO 200 000 0
Doc. Code: 035 — Sheet: 1 To 9
General Tolerances JED-261

Class	1)	Range of Nominal Dimensions (± mm) ≤ 50	> 50 ≤ 180	> 180 ≤ 400	> 400	∢
Fine		±0.5	±1	±1.5	±2	±3°
Medium	X	±1	±2	±3	±4	
Coarse		±2	±3.5	±5	±6.5	

Tapped Holes acc. -
1) Tolerance Class Applied Crossmarked

Copyright ZF®

	Date	Signature
Drawn	2024-04-17	Kaviya
Checked	2024-04-23	Saravanan

Dimensions in mm

ProVia

COUPLING HEAD TRACTOR CONTROL

Mass	Scale	Material No.	Date of first issue: 2024-04-23		
0.178 kg	NTS	PRO 200 017 0	Doc.Code 005	Language EN	Sheet 1/1
Size A 2	CAD System CREO	ECN-No. -	Revision - -	Techn. Resp. 5710_AM	Replacement for -

100mm

Non è permesso consegnare a terzi o riprodurre questo documento, né utilizzarne il contenuto o renderlo comunque noto a terzi senza autorizzazione esplicita. Ogni infrazione costituirà un evidente abuso e comporterà il risarcimento dei danni subiti. E' fatta riserva di tutti i diritti derivanti da brevetti o modelli.
Copying of this document and giving it to others and the use or communication of the contents thereof, are forbidden without express authority. Contravention of this restriction will constitute an evident abuse and result in a liability to the payment of damages. All rights are reserved in the event of the grant of patent or registration of a utility model or design. This document is the subject of copyright.
Toute Communication ou reproduction de ce document, toute exploitation ou communication de son contenu sont interdites, sauf autorisation expresse. Tout manquement à cette règle constitue un abus évident et expose son auteur au versement de dommages et intérêts. Tous droits de propriété industrielle réservés, notamment en matière de brevets et de modèles.
Weitergabe sowie Vervielfältigung dieser Unterlage, Verwertung und Mitteilung ihres Inhalts nicht gestattet, soweit nicht ausdrücklich zugestanden. Zuwiderhandlungen stellen einen offensichtlichen Missbrauch dar und verpflichten zu Schadenersatz. Alle Rechte für den Fall der Patenterteilung oder Gebrauchsmuster-Eintragung vorbehalten.