S.NO	SURFACE PROTECTION
I	ZINC PLATED WITH CR6+ FREE
II	ELECTRO-PAINTING
III	DACROMET
IV	SURFACE OXIDIZATION
V	RUBBER
VI	STICKERS
VII	BLACKENING

<!>	SAFETY CHARACTERISTICS	0
<2>	SIGNIFICANT CHARACTERISTICS	0
<CI>	CUSTOMER INTERFACE	6

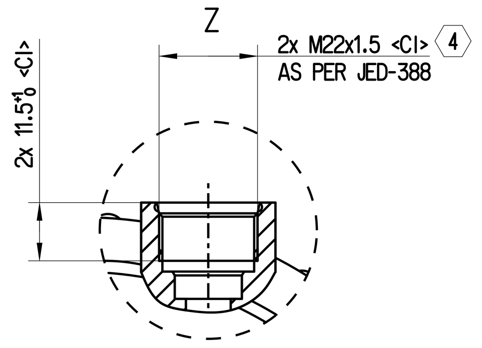

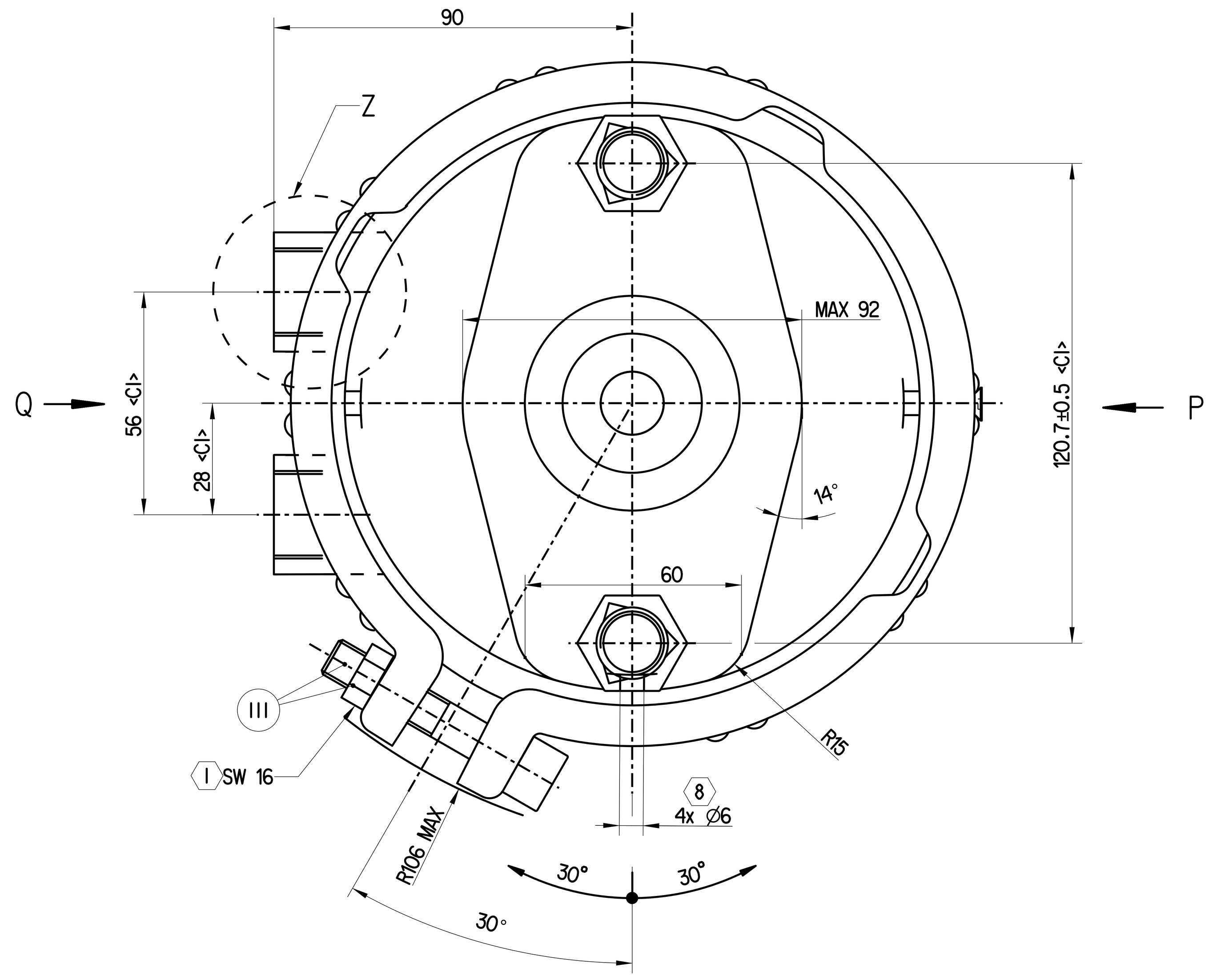

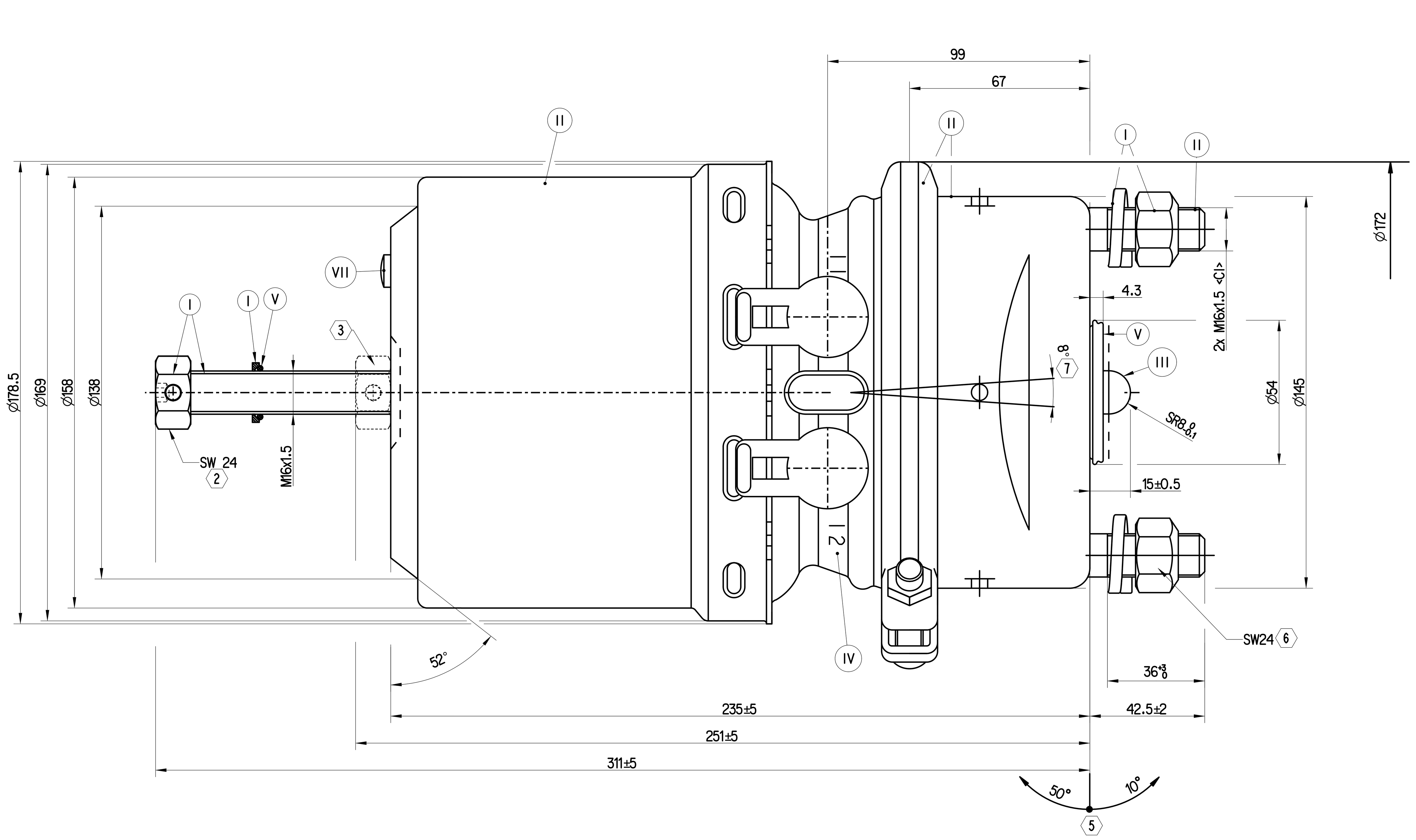

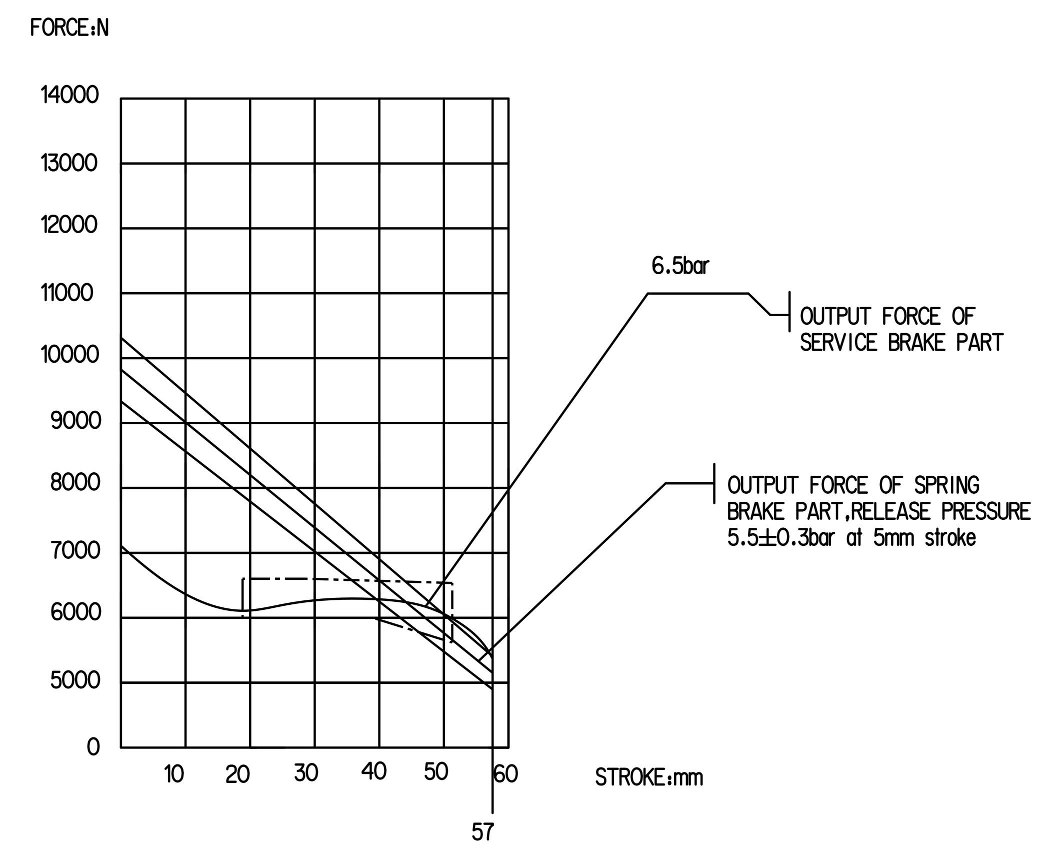

NOMINAL VALUES GIVEN FOR SERVICE SIDE, TOLERANCE BAND AS PER DIN 74060-3

NOMINAL VALUES GIVEN FOR SPRING SIDE, TOLERANCE BAND ± 5%

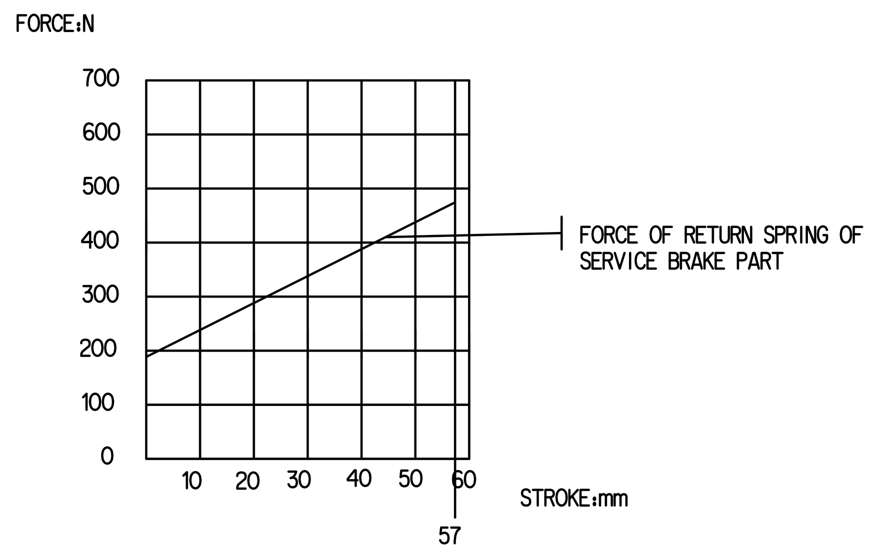

GRAPHS FOR INFORMATION ONLY

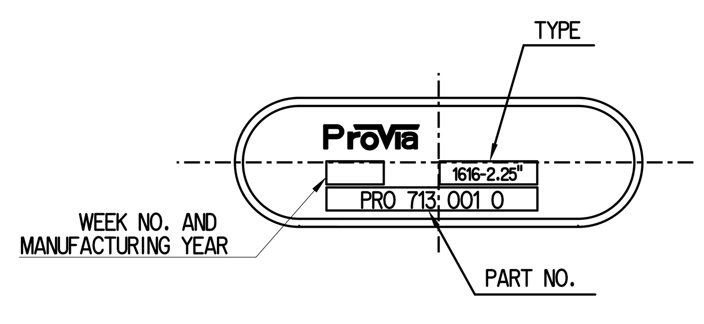

NAME PLATE

VIEW P

1. TORQUE: ≥35Nm
2. RELEASE POSITION, RELEASING WITH: 80Nm MAX.
3. DRIVING POSITION,TIGHTENING WITH: 25^{+20}_{0}Nm
4. TORQUE: MAX.53Nm
5. ADMISSIBLE INSTALLATION POSITION
6. TORQUE: 210^{0}_{-30} Nm
7. DEFLECTION: 8°MAX AT STROKE:0 mm
8. TO BE INSTALLED WITH LOWER BREATHER HOLE OPEN

TECHNICAL REQUIREMENT:

1.STROKE:
SERVICE BRAKE: ≥57mm
SPRING BRAKE: ≥57mm;

2.WORKING PRESSURE:
SERVICE CHAMBER: Pmax 10.2 bar, TEMPORARILY 13 bar;
PARKING CHAMBER: Pmax 8.5 bar, TEMPORARILY 11 bar.

3.WORKING TEMPERATURE: -40℃...+80℃;(-40℉.....+176℉)

4.THE DRAWING IS AT CAGED CONDITION,THE PARKING CHAMBER WILL BE AT UNCAGED CONDITION DURING SHIPMENT.

5.WORKING MEDIUM: AIR.

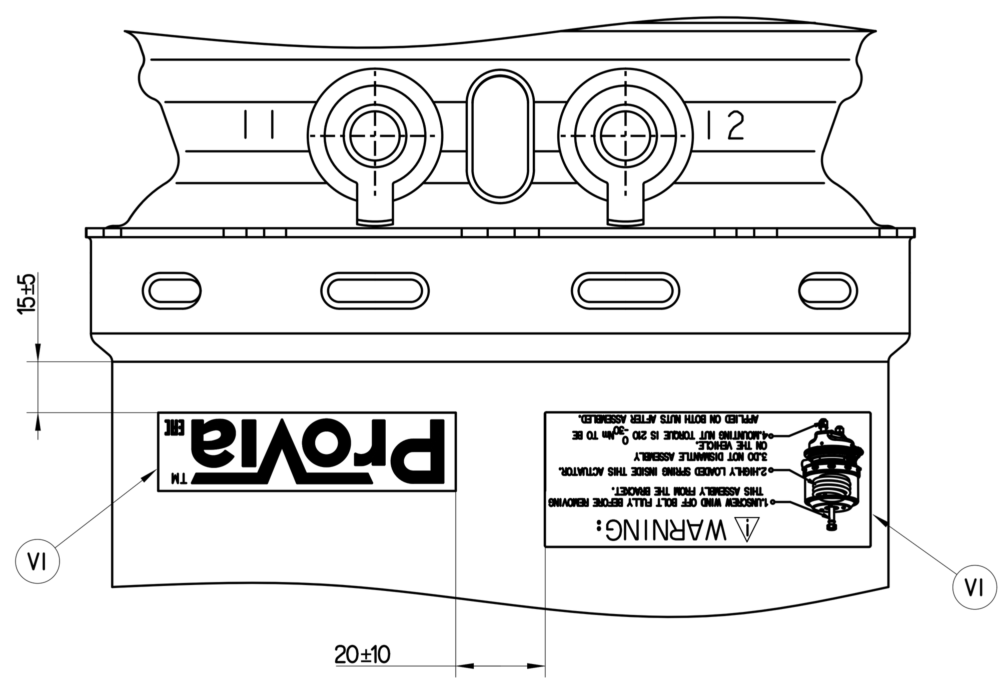

VIEW Q

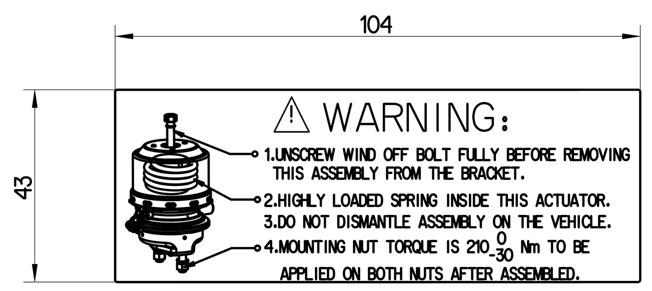

STICKER A B
VI

STICKER B
VI

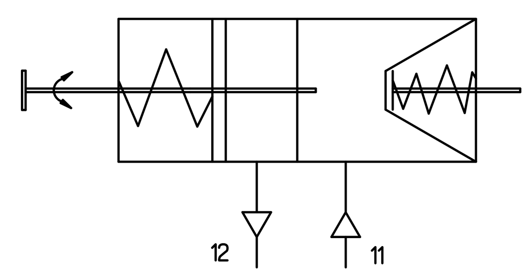

CIRCUIT DIAGRAM

General Specification: ISO 8015, JED-334-1, Size ISO 14405 LP						
Further Technical Data: PRO 713 080 0						
Doc. Code: 035			Sheet: 1 To 6			
General Tolerances JED-261						
		Range of Nominal Dimensions (± mm)				
Class 1)		≤ 50	> 50 ≤ 180	> 180 ≤ 400	> 400	∢
Fine		±0.5	±1.0	±1.5	±2	
Medium	X	±1	±2	±3	±4	±3°
Coarse		±2	±3.5	±5	±6.5	
Tapped Holes acc. JED-388						
1) Tolerance Class Applied Crossmarked						

Copyright ZF®		ProVia
Date	Signature	TRISTOP - BRAKE ACTUATOR
Drawn		
2024-07-30	Kaviya	
Checked		
2024-07-30	Vengatesh	
Dimensions in mm		

Mass	Scale	Material No.	Date of first issue: 2020-03-16		
7.4 kg	NTS	PRO 713 001 0	Doc.Code	Language	Sheet
			005	EN	1/1
Size	CAD System				
A 0	CREO	ECN-No. 517261	Revision 1x B	Techn. Resp. 5400_AM	Replacement for -

100mm

Toute Communication ou reproduction de ce document, toute exploitation ou communication de son contenu sont interdites, sauf autorisation expresse. Tout manquement a cette regle constitue un abus evident et expose son auteur au versement de dommages et interets. Tous droits de propriete industrielle reserves, notamment en matiere de brevets et de modeles.
Non e permesso consegnare a terzi o riprodurre questo documento, ne utilizzarne il contenuto o renderlo comunque noto a terzi senza autorizzazione esplicita. Ogni infrazione costituira un evidente abuso e comportera il risar cimento dei danni subiti. E'fatta riserva di tutti i diritti derivanti da brevetti o modelli.
Weitergabe sowie Vervielfaeltigung dieser Unterlage, Verwertung und Mitteilung ihres Inhalts nicht gestattet, soweit nicht ausdruecklich zugestanden. Zuwiderhandlungen stellen einen offensichtlichen Missbrauch dar und verpflichten zu Schadenersatz. Alle Rechte fuer den Fall der Patenterteilung oder Gebrauchsmuster-Eintragung vorbehalten.
Copying of this document and giving it to others and the use or communication of the contents thereof, are forbidden without express authority. Contravention of this restriction will constitute an evident abuse and result in a liability to the payment of damages. All rights are reserved in the event of the grant of patent or registration of a utility model or design. This document is the subject of copyright.