SURFACE PROTECTION	
I	ZINC PLATED WITH CR6+ FREE
II	ELECTRO-PAINTING
III	DACROMET
IV	SURFACE OXIDIZATION
V	RUBBER
VI	STICKERS
VII	BLACKENING

◇ SAFETY CHARACTERISTICS	0
◇ SIGNIFICANT CHARACTERISTICS	0
◇CI◇ CUSTOMER INTERFACE	6

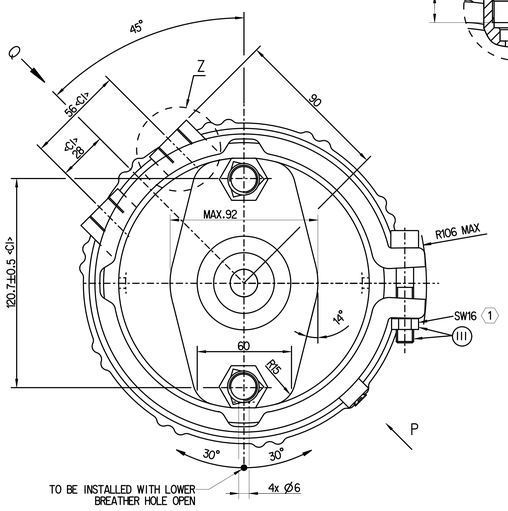

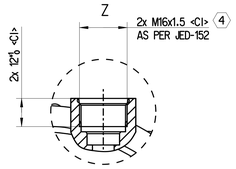

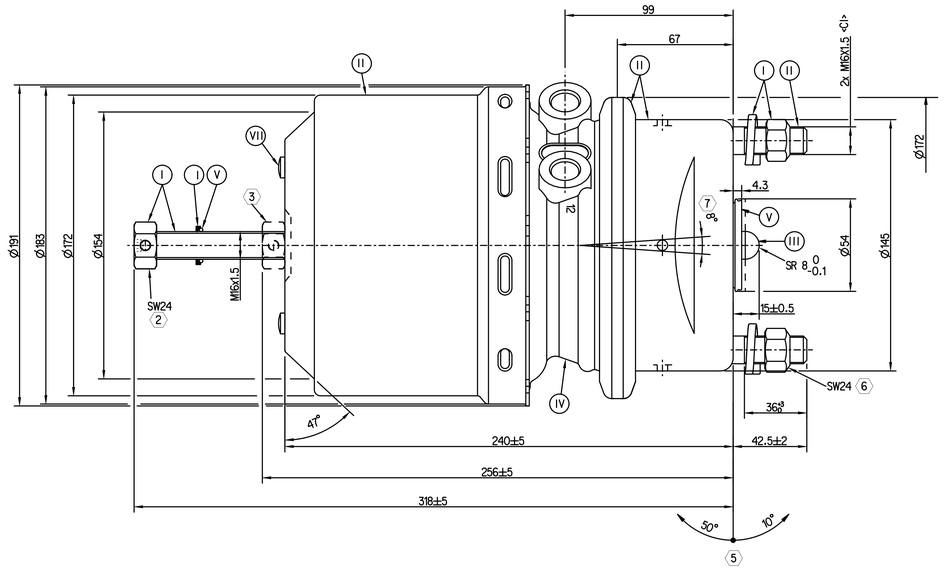

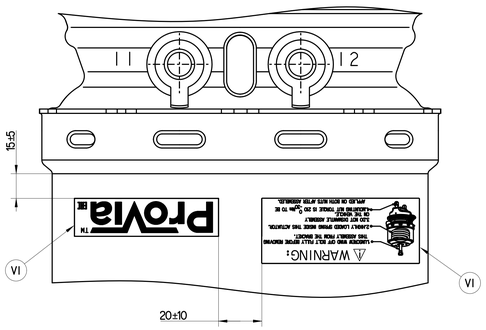

VIEW Q

(1) TORQUE: ≥35Nm

(2) RELEASE POSITION, RELEASING WITH: 80Nm MAX.

(3) DRIVING POSITION,TIGHTENING WITH: 25^{+20}_{0} Nm

(4) TORQUE: MAX. 34Nm

(5) ADMISSIBLE INSTALLATION POSITION

(6) TORQUE: 210^{0}_{-30} Nm

(7) DEFLECTION: 8°MAX AT STROKE:0 mm

TECHNICAL REQUIREMENT:

1.STROKE:
SERVICE BRAKE: ≥57mm
SPRING BRAKE: ≥57mm;

2.WORKING PRESSURE:
SERVICE CHAMBER: Pmax 10. 2 bar, TEMPORARILY 13 bar;
PARKING CHAMBER: Pmax 8.5 bar, TEMPORARILY 11 bar.

3.WORKING TEMPERATURE: -40°C...+80°C;

4.THE DRAWING IS AT CAGED CONDITION,THE PARKING CHAMBER WILL BE AT UNCAGED CONDITION DURING SHIPMENT;

5.WORKING MEDIUM: AIR.

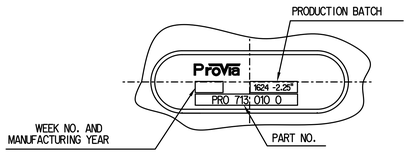

NAME PLATE

VIEW P

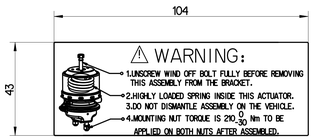

STICKER A (3)
VI

STICKER B
VI

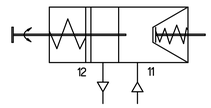

CIRCUIT DIAGRAM

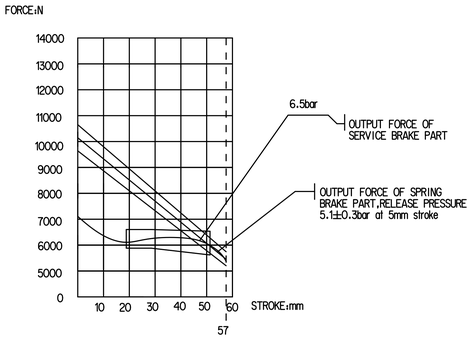

NOMINAL VALUES GIVEN FOR SERVICE SIDE, TOLERANCE BAND AS PER DIN 74060-3
NOMINAL VALUES GIVEN FOR SPRING SIDE, TOLERANCE BAND ± 5%

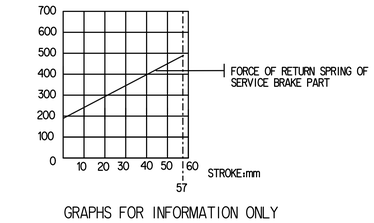

GRAPHS FOR INFORMATION ONLY

Tale Comunicazione, la riproduzione di questo documento, l'uso esclusivo o la comunicazione di suo contenuto non consentiti, salvo autorizzazione esplicita. Gli trasgressori si obbligano a risarcire il danno. Tutti i diritti sono riservati, in caso di rilascio di brevetto, marchio o modello registrato.
Questo disegno resta proprietà della società Provia. Non può essere copiato o altrimenti riprodotto, in tutto o in parte, senza il nostro consenso scritto. Non può essere usato per scopi diversi da quelli per i quali è stato fornito. Non può essere comunicato a terzi.
Copyright © This document and every its copies are the sole property of the company Provia. Copies, reproduction, use for purposes other than those for which it was delivered and communication to third parties are not allowed without our written consent. Violators are liable for damages. All rights are reserved in the event of the grant of patent or registration of a utility model or design.

General Specification: ISO 8015, JED-334-1, Size ISO 14405 LP				Copyright 2019		ProVia	
Further Technical Data: PRO 713 001 0				Date	Signature	TRISTOP - BRAKE ACTUATOR	
Doc. Code:035	Sheet: 1 To 6			Drawn 2024-07-30	Kaviya		
General Tolerances JED-261				Checked 2024-07-30	Vengatesh		
Range of Nominal Dimensions (± mm)				Dimensions in mm			
Class 11	≥ 50	> 50 ≥ 180	> 180 ≥ 400	> 400			
Fine	±0.5	±1.0	±1.5	±2			
Medium X	±1	±2	±3	±4	±3°		
Coarse	±2	±3.5	±5	±6.5			
Tapped Holes acc. JED-152							
11 Tolerance Class Applied Crossmarked							

Mass	Scale	Material No.	Date of first issue: 2020-09-16		
8.2 kg	NTS	PRO 713 010 0	Doc.Code 005	Language EN	Sheet 1/1
Size A 0	CAD System CREO	ECN No. 5117261	Revision 2x B	Techn. Resp. 5400JAM	Replacement for -

100mm