EXTERNAL SURFACE AEUSSERE OBERFLAECHE SURFACE EXTERIEURE SUPERFICIE ESTERNA	I JED-259-3
	II JED-256
	III JED-352-1
	IV JED-534-1

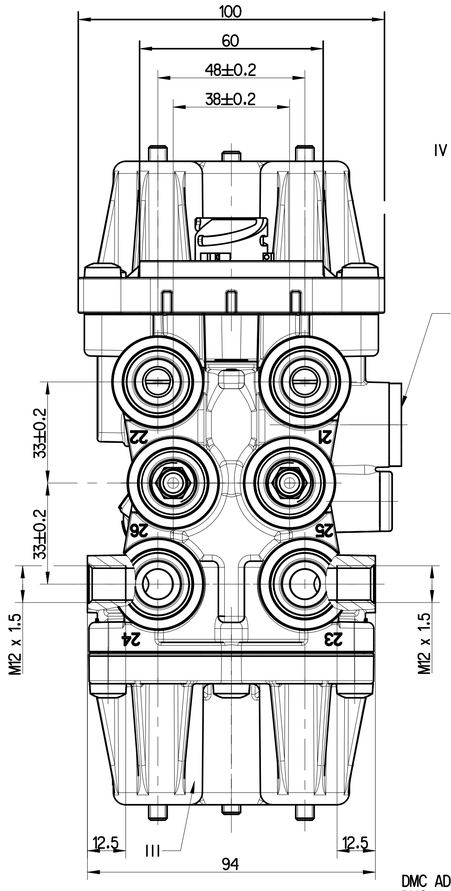

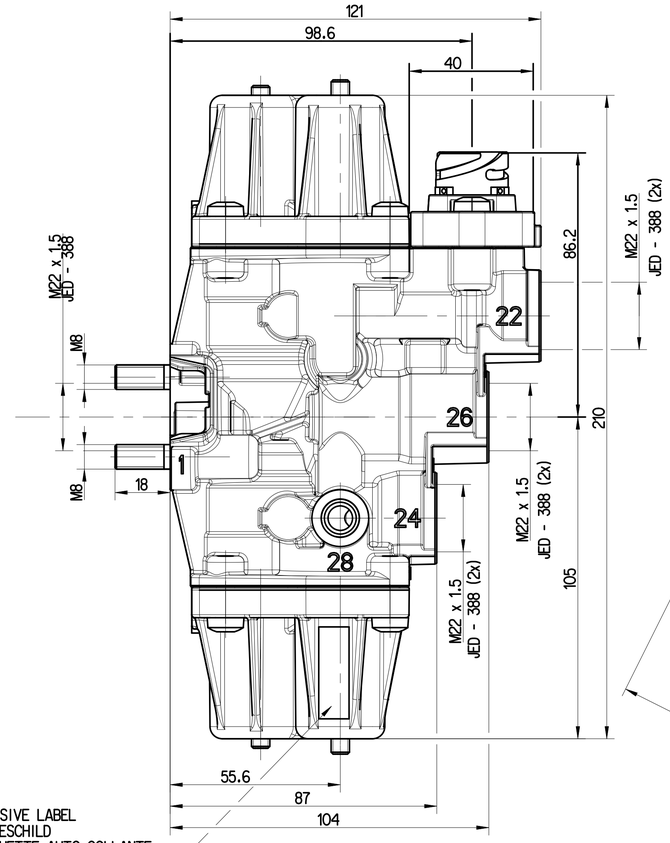

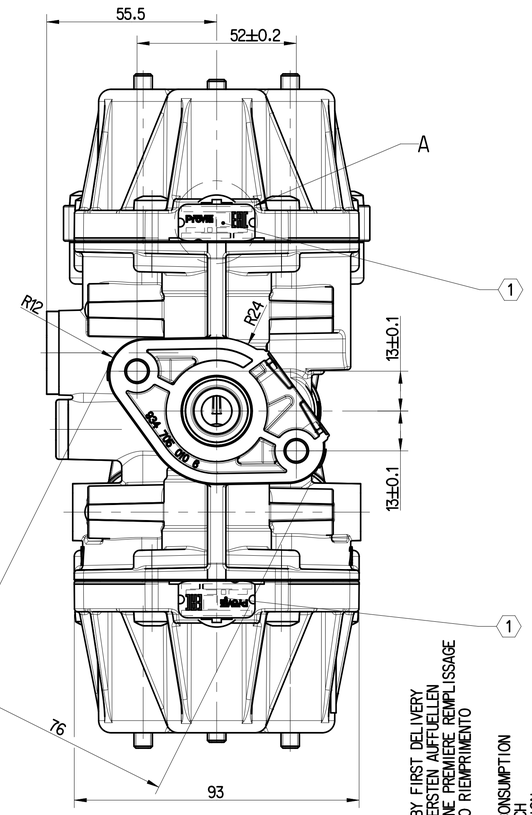

DMC ADHESIVE LABEL
DMC KLEBESCHILD
DMC ETIQUETTE AUTO-COLLANTE
DMC AUTO-ADESIVA

THERMAL RANGE OF CONTINUOUS APPLICATION:
THERMISCHER DAUERANWENDUNGSBEREICH:
PLAGE DE TEMPERATURE EN UTILISATION CONTINUE:
COMPO DI APPLICAZIONE CONTINUA: -40°C....+80°C

MEDIUM: COMPRESSED AIR
MEDIUM: DRUCKLUFT
FLUIDE: AIR COMPRIME
FLUIDO: ARIA COMPRESSA

WORKING PRESSURE:
BETRIEBSDRUCK:
PRESSION DE SERVICE:
PRESSIONE D' ESERCIZIO: $p_e$max.=13bar

INSTALLATION POSITION OPTIONAL
EINBAULAGE BELIEBIG
POSITION D' INSTALLATION A VOLONTE
POSIZIONE DI MONTAGGIO A SCELTA

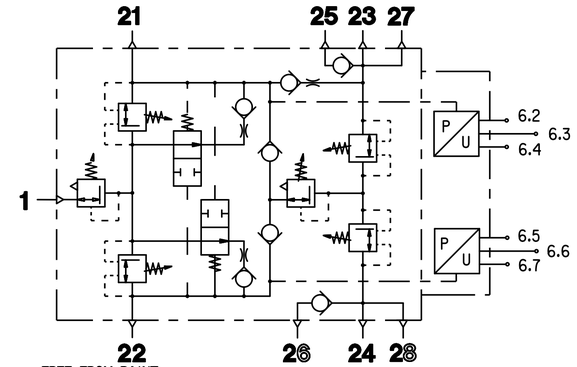

1 FREE FROM PAINT
FARBFREI
EXEMPTE DE PEINTURE
NON VERNICIARE

CONNECTIONS: ANSCHLUESSE: ORIFICES: ORIFIZI:	1		FROM AIR DRYER VOM LUFTTROCKNER DE DESSICATEUR D'AIR ESSICATORE D'ARIA
	21	CIRCUIT KREIS CIRCUIT CIRCUITO	1
	22		2
	23, 25, 27		3
	24, 26, 28		4

PRESSURE DRUCK PRESSION PRESSIONE [bar]	CIRCUIT KREIS CIRCUIT CIRCUITO 1+2	CIRCUIT KREIS CIRCUIT CIRCUITO 3+4
OPENING PRESSURE : OEFFNUNGSDRUCK : dyn. PRESSION D'OUVERTURE : PRESSIONE DI APERTURA:	9.0 $^{0}_{-0.3}$	7.5 $^{0}_{-0.3}$
CLOSING PRESSURE : SCHLIESSDRUCK : dyn. PRESSION DE FERMETURE: PRESSIONE DI CHIUSURA:	⩾7.0	⩾4.5
PRESSURE LIMITING DRUCKBEGRENZUNG LIMITATION DE PRESSION LIMITAZIONE DI PRESSIONE	10 ±0.2	8.5 $^{0}_{-0.4}$

PRESSURE SENSOR MODULE :
DRUCKSENSORMODUL :
MODULE DE CAPTEUR DE PRESSION :
MODULO DI SENSORE DI PRESSIONE :

MEASURING PRINCIPLE :PIEZO-RESISTIVE
MESSPRINZIP :PIEZORESISTIV
PRINCIPE DE MESURE :PIEZORESISTIF
PRINCIPO DI MISURA :PIEZORESISTIVO

SUPPLY VOLTAGE
SPEISESPANNUNG 5V DC ± 5 %
TENSION D'ALIMENTATION
TENSIONE D'ALIMENTAZIONE

CURRENT CONSUMPTION
STROMAUFNAHME Max. 30 mA
CONSOMMATION DE COURANT (2x Max. 15mA)
ASSORBIMENTO DI CORRENTE

INRUSH CURRENT
EINSCHALTSTROM ≦ 115 mA (t ≦ 16µs)
COURANT D'APPEL
CORRENTE DI INSERIMENTO

THERMAL RANGE OF APPLICATION
THERMISCHER ANWENDUNGSBEREICH -40°C... +80°C
PLAGE DE TEMPERATURE EN UTILISATION
CAMPO TERMICO DI APPLICAZIONE

MEASURING RANGE :
MESSBEREICH :
ZONE DE MESURE : 0,85 - 12,85 bar
CAMPO DI MISURA :

ABSOLUTE PRESSURE
ABSOLUTDRUCK
PRESSION
PRESSIONE

ADMISSIBLE OVERPRESSURE
ZULAESSIGER UEBERDRUCK 16 bar
ADMISSIBLE SUPPRESSION
ADMISSIBLE SOVRAPRESSIONE

PRESSURE SENSOR UNIT
DRUCKSENSOR
UNITE DE CAPTEUR DE PRESSION
UNITA DI SENSOREDI PRESIONE

932 500 503 1 - A 000 430 39 07

PORT
ANSCHLUSS DIN 72 585
ORIFICE
ORIFIZIO

OFFSET
OFFSET
DEPLACEMENT DE VALEURS 1 V
DIFFERIMENTO DEI VALORI

SENSITIVITY
EMPFINDLICHKEIT 250 mV / bar
SENSIBILITE
SENSIBILITA

LINEARITY
LINEARITAET ≦ ± 0.3 % FS
LINEARITE
LINEARITA

HYSTERESIS
HYSTERESE ≦ ± 0.2 % FS
HYSTERESIS
ISTERESI

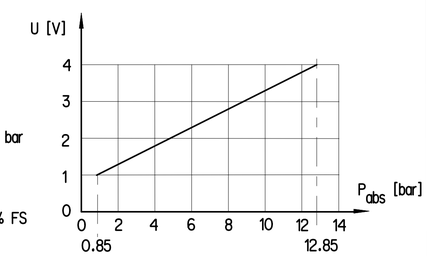

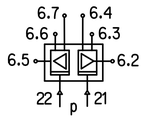

SEE WABCO-DRAWING
SIEHE WABCO-ZEICHNUNG 858 000 823 4
VOIR WABCO-DESSIN
VEDER

AMP No.:
92-52080-100

CIRCUIT KREIS CIRCUIT CIRCUITO	21			22		
CONTACT KONTAKT CONTACT CONTATTO	6.2	6.3	6.4	6.5	6.6	6.7
FUNCTION FUNKTION FONCTION FUNZIONE	OUTPUT AUSGANG SORTIE USCITA	+5 VDC	0 V	OUTPUT AUSGANG SORTIE USCITA	+5 VDC	0 V

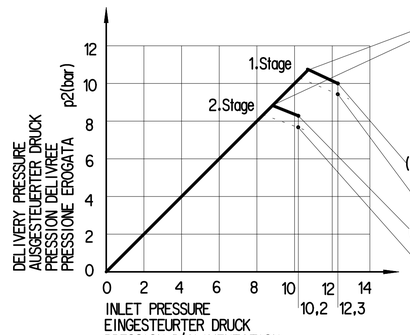

(10±0,2 bar)
(9,4 bar)
(8,5-0,4 bar)
(7,7 bar)

PRESSURE LIMITATION BY FIRST DELIVERY
DRUCKBEGRENZUG BEIM ERSTEN AUFFUELLEN
LIMITATION PENDANT UNE PREMIERE REMPLISSAGE
LIMITAZIONE COL PRIMO RIEMPRIMENTO

PRESSURE LIMITATION AFTER CONSUMPTION
DRUCKBEGRENZUG NACH VERBRAUCH
LIMITATION APRES CONSOMMATION
LIMITAZIONE DI PRESSIONE DOPO CONSUMO

MINIMUM PRESSURE INCLUDING MAX HYSTERESIS
MINIMALER DRUCK INCLUSIVE MAX HYSTERESE

DATA MATRIX CODE
DATEN MATRIX CODE
CODE DE MATERICE DE DONNEES
CODICE MATRICE DATI

MANUFACTURING PLANT
PRODUKTIONSSTAETTE
LIEU DE FABRICATION
LIOGO DI FABRICATIONE

DATE OF MANUFACTURE
HERSTELLDATUM
DATE DE FABRICATION
DATA DI FABRICATIONE

IDENTIFICATION NUMBER
IDENTIFIZIERUNGS-NUMMER
NUMERO D'IDENTIFICATION
NUMERO D'IDENTIFICATIONE

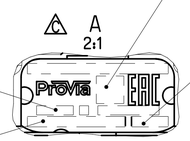

Cleanliness requirements / Restschmutzanforderungen			
Cleanliness requirements and test cleaning method referring to DBL 6515 and 6516 Restschmutzvorgaben und Restschmutzreinigungsverfahren nach DBL 6515 und 6516			
Size Range/ Partikelgrößenklasse	Size of particle/ Partikelgröße [Pm]	Contamination Category/ Kontaminations-Schlüssel	quantity per 1.000cm²/ Partikelanzahl je 1.000cm² maximal
F	100 ≤ x < 150	8	250
G	150 ≤ x < 200	6	64
H	200 ≤ x < 400	5	32
I	400 ≤ x < 600	4	16
J	600 ≤ x < 1000	3	8
K	1000 ≤ x	00	0

General Specification: ISO 8015, JED-334-1, Size ISO 14405 LP						
Further Technical Data: Product Specification						
Doc. Code: 035			Sheet: 1 To 3			
General Tolerances JED-261						
	Range of Nominal Dimensions (± mm)					
Class 1)	≦ 50	> 50 ≦ 180	> 180 ≦ 400	> 400		
Fine	±0.5	±1	±1.5	±2		
Medium X	±1	±2	±3	±4	±3°	
Coarse	±2	±3.5	±5	±6.5		
Tapped Holes acc. JED-388						
1) Tolerance Class Applied Crossmarked						

Copyright ZF®

Date	Signature
Drawn 2025-06-12	Pakula
Checked 2025-06-12	Pawlowski

Dimensions in mm

Provia

MULTIPLE-CIRCUIT PROTECTION VALVE

Mass	Scale	Material No.	Date of first issue: 2017-02-02
1.55 kg	1:1 (2:1)	PRO 934 005 0	Doc.Code 005 / Language ML / Sheet 1/1
Size A 1	CAD System CREO	ECN-No. 513662 / Revision 1 x C / Techn. Resp. 5120_AM	Replacement for -

100mm

Toute Communication ou reproduction de ce document, toute exploitation ou communication de son contenu sont interdites, sauf autorisation écrite. Tous droits de propriété industrielle réservés. notamment en matière de brevets et de modèles.
Weitergabe sowie Vervielfältigung dieser Unterlage, Verwertung und Mitteilung ihres Inhalts nicht gestattet, soweit nicht ausdrücklich zugelassen. Zuwiderhandlungen verpflichten zu Schadenersatz. Alle Rechte vorbehalten, insbesondere für Patenterteilung und Gebrauchsmustereintragung vorbehalten.
Non è permesso consegnare o farsi o riprodurre questo documento, né utilizzare il contenuto o renderlo comunque noto a terzi in assenza di autorizzazione scritta. Tutti i diritti di proprietà industriale sono riservati, in particolare quelli di brevetto e di modello.
E'vietato riservare ai fulti i diritti derivanti da brevetti o modelli.
Copying of this document and giving it to others and the use or communication of the contents thereof, are forbidden without express authority. Offenders are liable to the payment of damages. All rights are reserved in the event of the grant of patent or registration of a utility model or design. This document is the subject of copyright.