PROVIA PART NUMBER	PRESSURE SENSOR ②	③	④	MASS
PR05012110	X	X		6.55
PR05012120			X	6.50

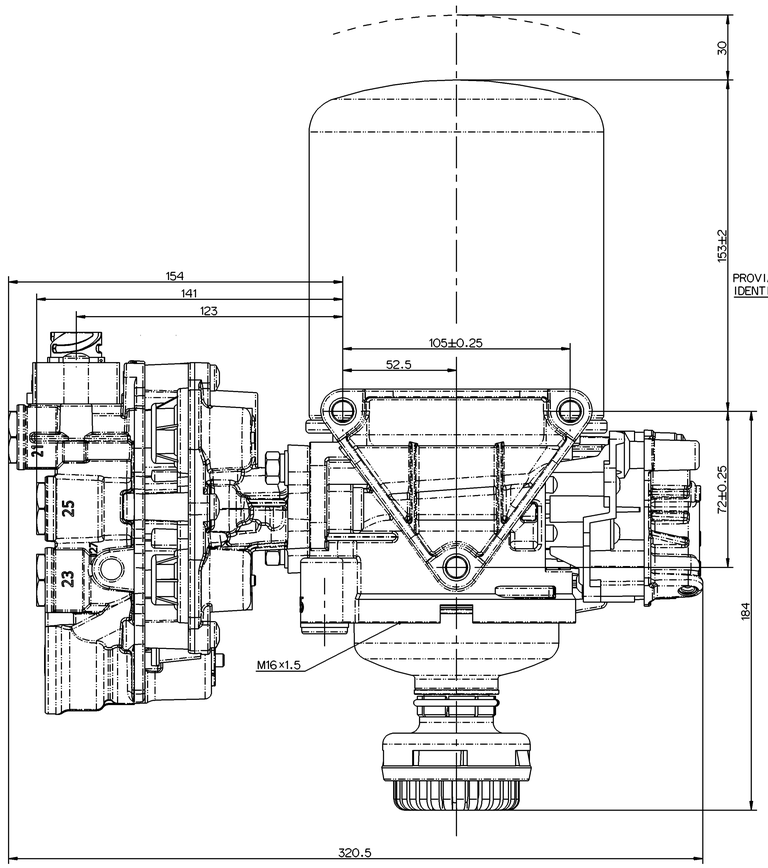

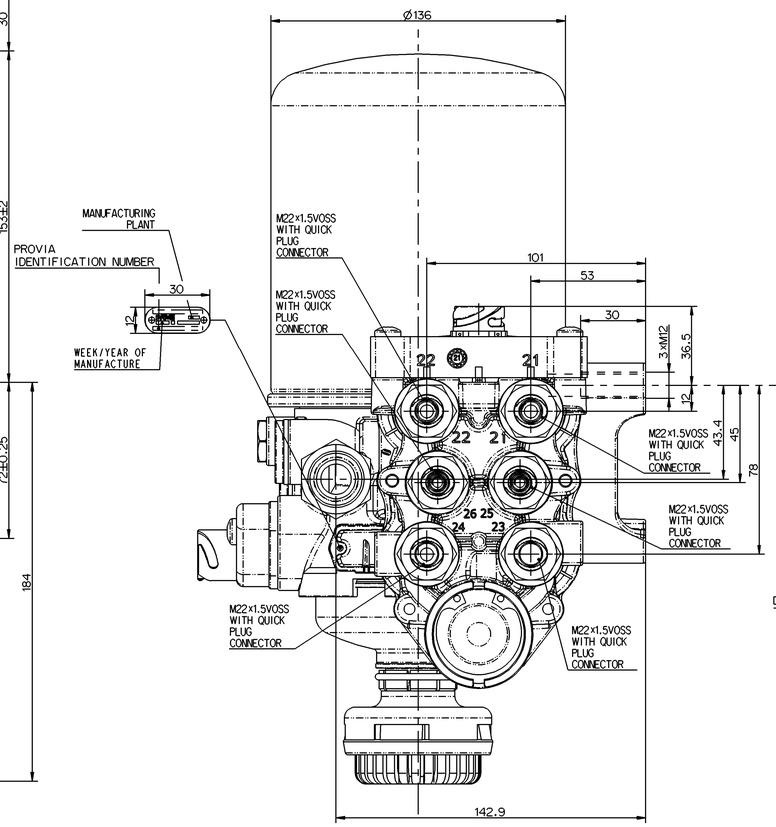

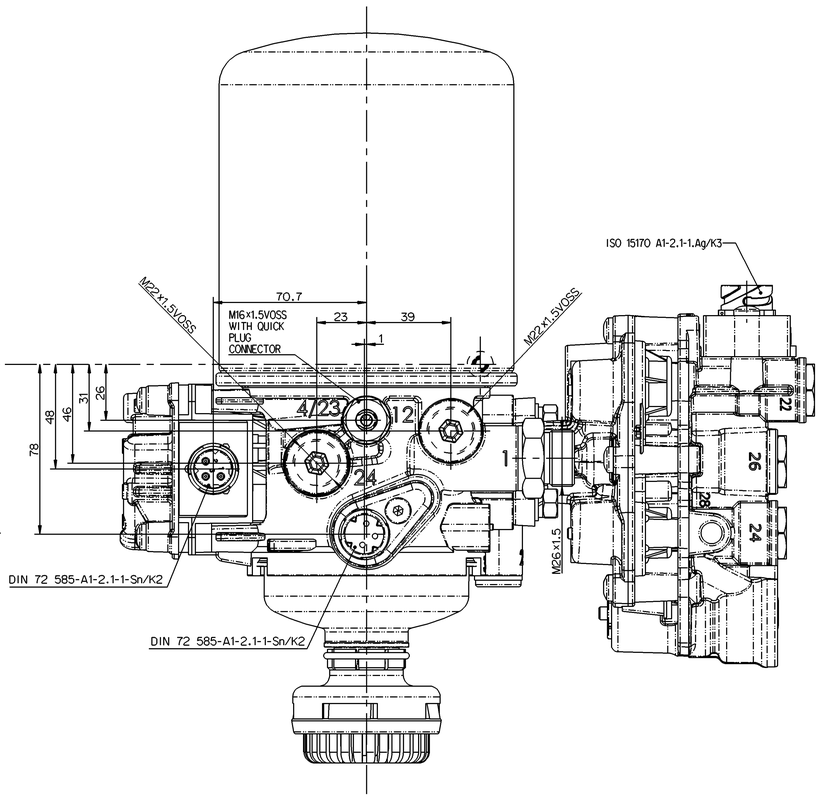

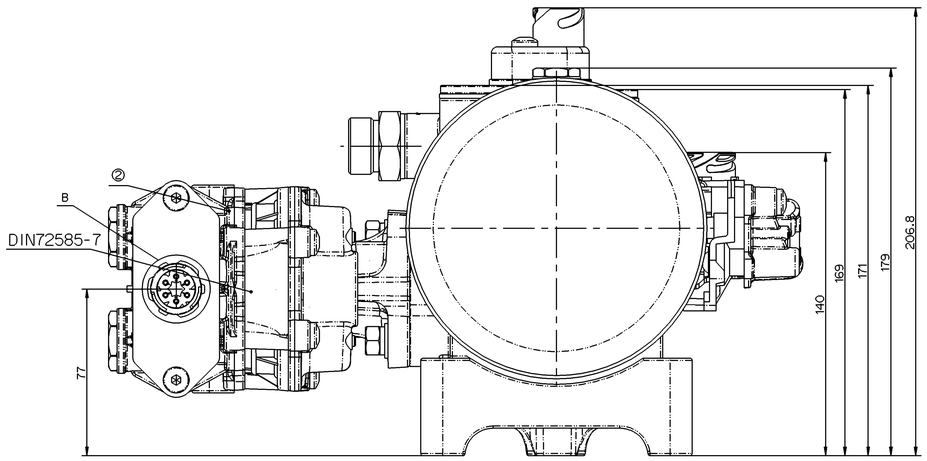

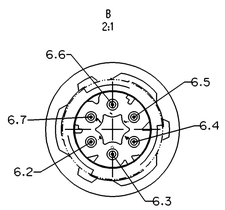

21			22		
6.2	6.3	6.4	6.5	6.6	6.7
OUTPUT	+5VDC	-0V	OUTPUT	+5VDC	-0V

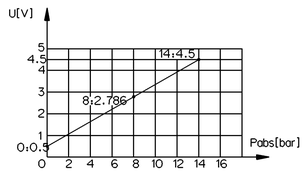

V_o=(0.2857P+0.5)/5×Vin(VDC)
V_o:INPUT VOLTAGE
P:INPUT PRESSURE(bar)
Vin: MAINS INPUT

APPLICABLE FOR PR05012110

WHEN THE PRESSURE IN PORT 21 IS ZERO,THE MAXIMUM PRESSURE IN PORT23 IS 1 bar.

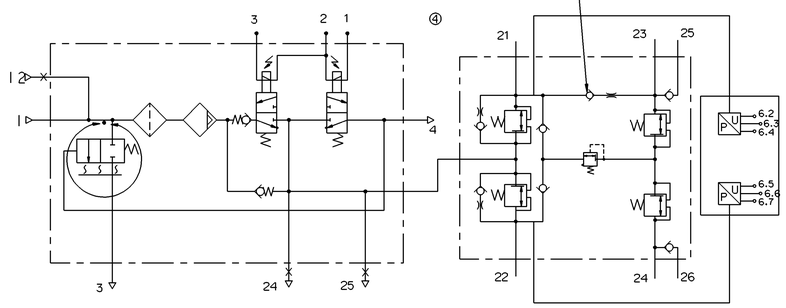

APPLICABLE FOR PR05012120

WHEN THE PRESSURE IN PORT 21 IS ZERO,THE MAXIMUM PRESSURE IN PORT23 IS 1 bar.

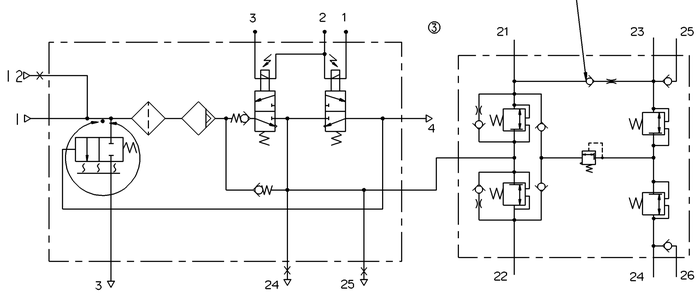

CIRCUIT TECHNICAL PARAMETERS (BAR)				
CONNECTING PORT	21	22	23/25	24/26
OPENING PRESSURE	$6.0^{0}_{-0.3}$ (COMPLETELY OPEN)	$6.0^{0}_{-0.3}$ (COMPLETELY OPEN)	$6.5^{0}_{-0.3}$	$6.5^{0}_{-0.3}$
STATIC CLOSING PRESSURE	0	≥3.0	0	≥4.5
	≥4.5	0	≥4.5	≥4.5
	≥4.5	≥4.5	0	≥4.5
	≥4.5	≥4.5	≥4.5	0
LIMITING PRESSURE			8.5±0.2	

REMARKS:WHEN PORTS 21,22 ARE BY PASS INLET PORTS,THE OPENING PRESSURE IN PORTS 21 AND 22 IS ZERO

TECHNICAL DATA

1.WORKING MEDIUM: COMPRESSED AIR

2.MAXIMUM WORKING PRESSURE:Pe MAX.=13bar

3.DYNAMIC PRESSURE OF SAFETY VALVE:13.0^{+4}_{0} bar

4.THERMAL RANGE OF CONTINUOUS APPLICATION:-40°C...+65°C

5.RESISTANCE TO HEAT:+80°MAX

6.HEATING VOLTAGE: 24V. CUT-IN TEMPERATURE:7±6℃ CUT-OFF TEMPERATURE: 29.5±3℃

7.THE OTHER TECHNICAL SPECIFICATIONS MEET WITH QC/T37QC/T996

General Specification: ISO 8015, JED-334-1, Size: ISO 14405 LP
Further Technical Data: Product Specification
Doc. Code-035 Sheet 1 To 12

General Tolerances JED-261		Range of Nominal Dimensions (in mm)			
Class	1)	≤ 50	> 50 ≤ 180	> 180 ≤ 400	> 400
Fine		±0.5	±1.0	±1.5	±2
Medium	1)	±1	±2	±3	±4
Coarse		±2	±3.5	±5	±6.5

Tapped Holes acc. JED-388
1) Tolerance Class Applied Crosshanded

Copyright 2F®

Date	Signature	
Drawn 2023-07-10	Murugan	
Checked Pawłowski	2023-07-25	

Dimensions in mm

Provia
AIR PROCESSING UNIT

Mass	Scale	Material No.	Date of first issue	
/ kg	1:1	PRO 501 211 0	Doc.Code 053	Language EN / Sheet 1/1
Size A 0	CAD System CREO	EDB-No. -	Revision -	Techn. Resp. SIYO, AM

Replacement for -

100mm

Tale informacje są własnością firmy Provia i nie powinny być ujawniane, ani udostępniane osobom trzecim bez pisemnej zgody firmy Provia. Dokument ten dotyczy produktu firmy Provia i nie powinien być wykorzystywany do celów innych niż ten produkt. Wszelkie prawa zastrzeżone. Dokument ten nie może być powielany ani w całości ani w części bez pisemnej zgody firmy Provia.
Diese Informationen sind Provia gehörig und sollen weder ganz noch teilweise an Dritte weitergegeben werden, es dürfen keine anderen Zwecken dieses Produkts verwendet werden. Alle Rechte vorbehalten. Dieses Dokument bezieht sich auf das Produkt von Provia und darf ohne schriftliche Genehmigung von Provia weder ganz noch teilweise vervielfältigt werden.
This information is the property of Provia and should not be disclosed to third parties, nor should it be used for purposes other than this product. All rights reserved. This document relates to the product of Provia and may not be reproduced in whole or in part without the written permission of Provia.